ROHL
Authentic Luxury for Kitchen and Bath™

www.rohlhome.com

Single Lever Single Hole Mixer With Handspray

ROHL Perrin & Rowe Kitchen

U.4746*

FEATURES

- Metal levers only
- Made from solid brass bar stock, CNC machined
- Ceramic disk control cartridge
- Swivel spout with two point bearing and sealing
- Insulated brass sidespray
- 1 3/4" max. installation on bench

COLORS/FINISHES

- Polished Chrome
- Polished Nickel
- Satin Nickel
- Inca Brass
- English Bronze

WARRANTY

- Limited Lifetime

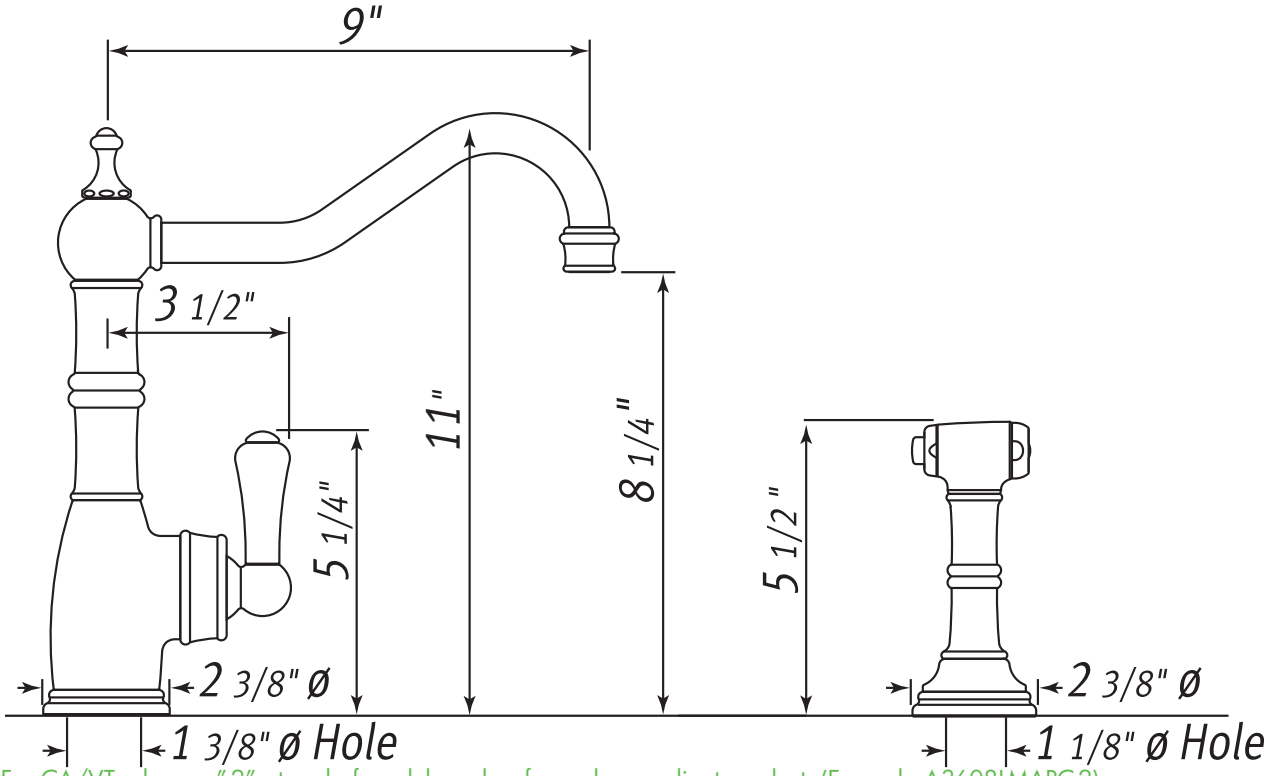

* For CA/VT, place a "-2" at end of model number for code compliant product. (Example A3608LMAPC-2)

Consult your local ROHL showroom for additional information and specifications. For complete warranty details and a list of showrooms, go to www.rohlhome.com.

ROHL
Authentic Luxury for Kitchen and Bath™

www.rohlhome.com

U.4746 Spare Parts

Where * Indicated Specify Color.

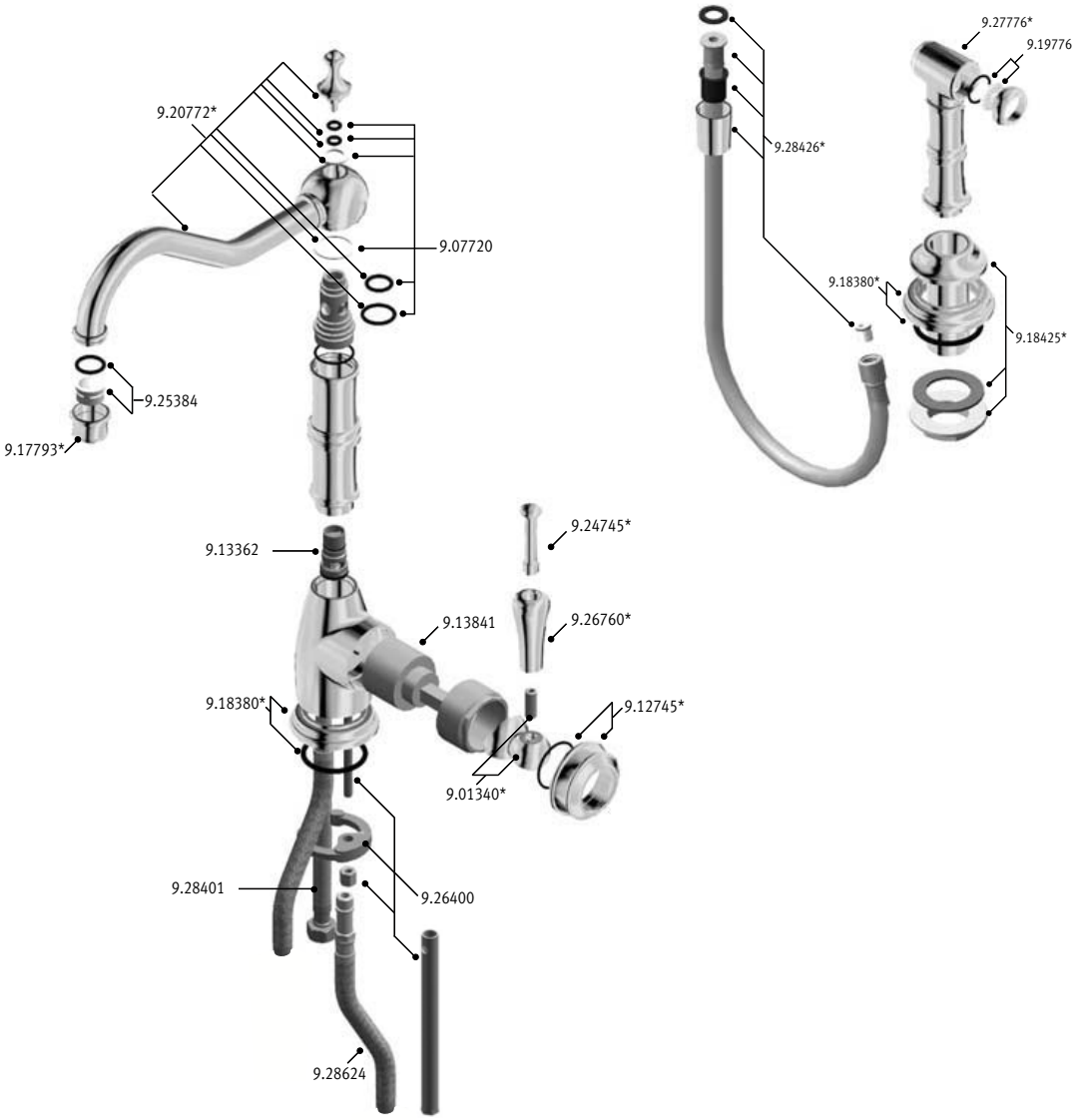

Consult your local ROHL showroom for additional information and specifications. For complete warranty details and a list of showrooms, go to www.rohlhome.com.