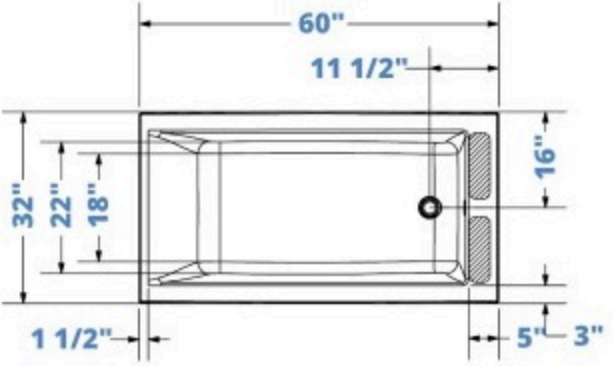
60"
11 1/2"
32"
22"
18"
16"
1 1/2"
5"
3"

6 1/4"

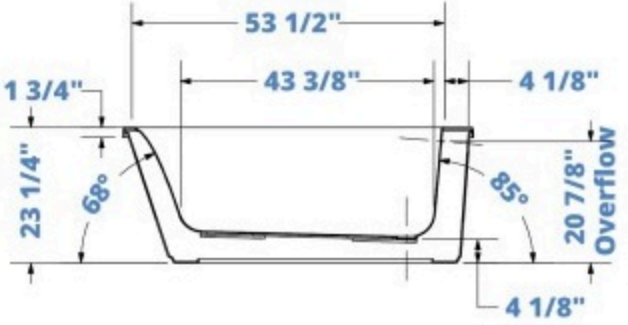
53 1/2"
43 3/8"
4 1/8"
1 3/4"
23 1/4"
68°
85°
20 7/8"
Overflow
4 1/8"