Side Deck Mount Clawfoot Tub Shower Enclosure with Gooseneck Faucet and Showerhead

by Randolph Morris

Item #: RM736

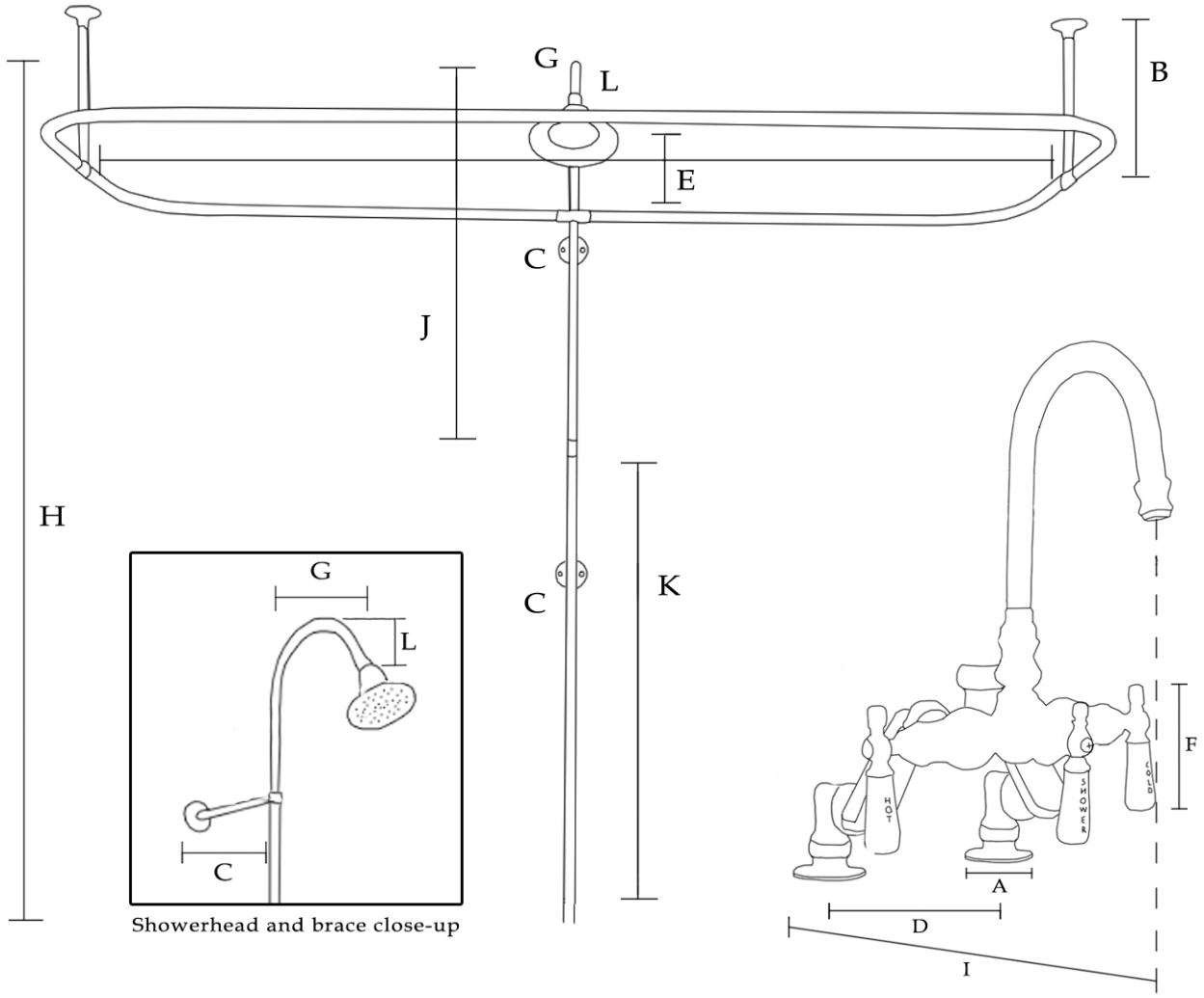

(A)	Base: 2″ OD	(E)	Frame: 28″ W x 60″ L; 3/4″ OD	(I)	Spout: 9″ Reach
(B)	Brace - Ceiling: 30″ L	(F)	Handle: 3-1/2″ L	(J)	Upper Pipe Riser: 28″ L
(C)	Brace - Wall: 10″ L	(G)	Projection: 9″ Reach	(K)	Lower Riser Pipe: 48″ L
(D)	Centers: 3″ – 8-1/2″ W	(H)	Riser: 76″ H; 5/8″ OD	(L)	Riser Curve Drop: 5″ L

Flow Rate: 7 gal/min

All products and specifications are subject to change without notice. Randolph Morris is not responsible for typographical and/or dimensional errors. Typographical errors are subject to correction.

Note: Rough-in dimensions may vary +/- 1/2″ and are subject to change. No responsibility is assumed by Randolph Morris.