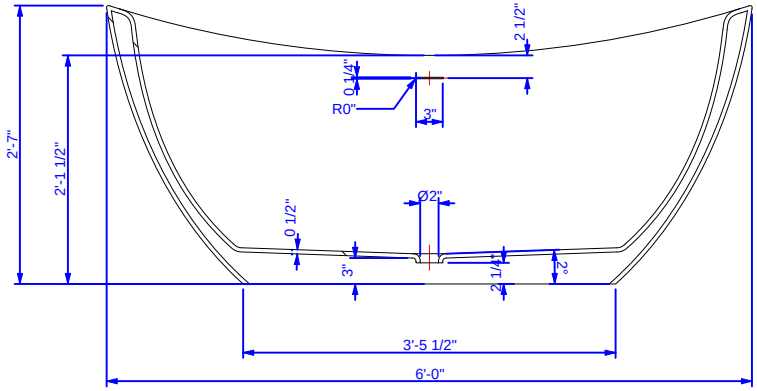


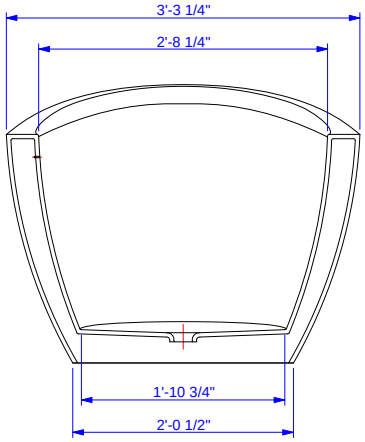


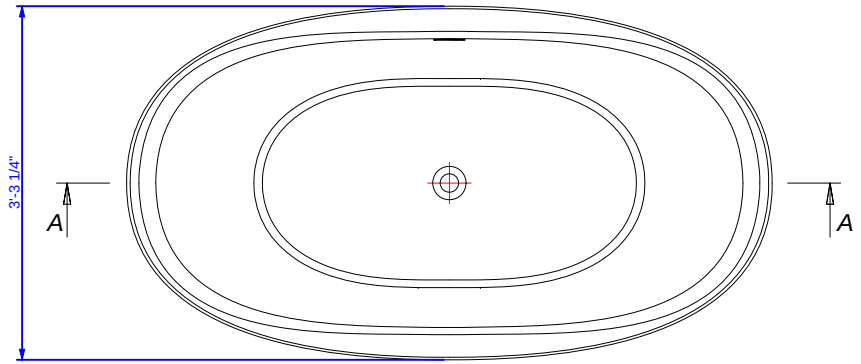


| | | |
|---|---|---|
| DRAWN YURI TYMOCHKO | 2016-09-26 | aquatica PLUMBING |
| CHECKED | | TITLE: Purescape 171 |
| QA | | |
| APPROVED | | |
| | | SIZE C / DWG NO / REV |
| | | SCALE / SHEET 1 OF 1 |