Strom Plumbing

BY Sign of the Crab

Ph: (916) 638-2722 / Fax: (916) 638-2725

Tub Specifications – P1106 Acrylic Soaking Tub

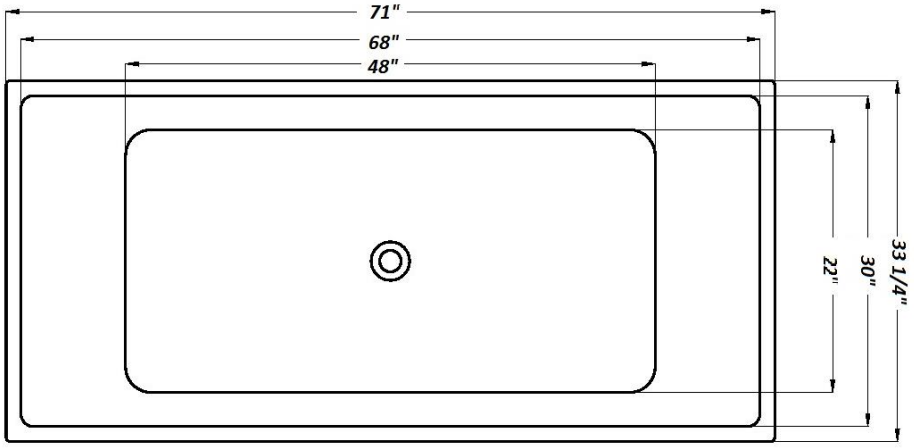

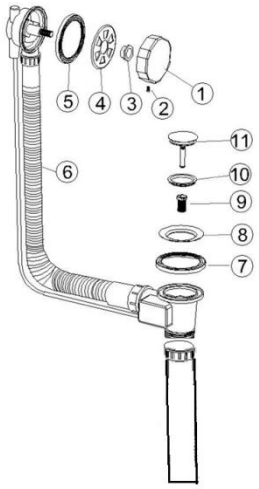

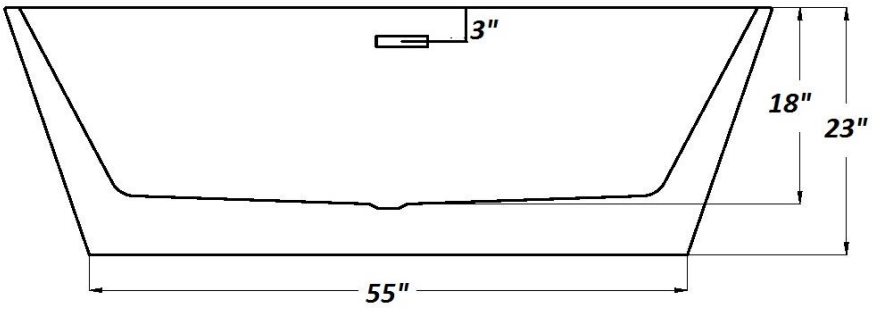

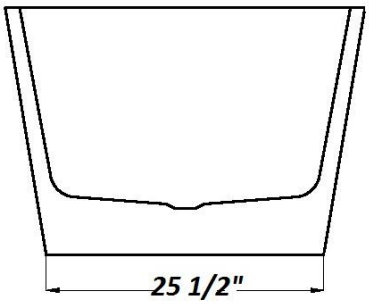

Please use a bead of silicone around the base of the tub to provide a seal between the tub and the floor, and to prevent the tub from moving.

SIGN OF THE CRAB, LLC