NEWPORT BRASS®
Flawless Beauty. From Faucet to Finish.™

CHESTERFIELD

Single Hole Lavatory Faucet

932

Features

- Solid brass construction
- Forged brass body with integral spout and handles
- Quarter-turn washerless ceramic disc valve cartridges
- ADA compliant traditional cross handles
- Spout assembly with integral supply hoses
- Pop-up drain with tailpiece
- 1-7/16" (3.7 cm) spout height at outlet
- 5-5/8" (14.3 cm) spout reach (c-c)
- For single hole configurations
- 1.5 gallons (5.7 liters) per minute maximum flow rate

Codes / Standards Compliance

Meets or exceeds the following at date of manufacture:

- ASME A112.18.1/CSA B125.1
- IAPMO/cUPC
- IPC
- NSF 61
- ADA
- ICC/ANSI A117.1
- Energy Policy Act of 1992
- All applicable US Federal and State material regulations
- EPA WaterSense®

Colors / Finishes

- 10B: Oil Rubbed Bronze
- 15: Polished Nickel
- 15A: Antique Nickel
- 26: Polished Chrome

- Other: Refer to the Newport Brass catalog for additional color/finish options.

Specified Model

Model	Description	Colors / Finishes	
932	Single Hole Lavatory Faucet	☐ 10B ☐ 15 ☐ 15A ☐ 26	☐ Other

Product Specification:

Add "Color / Finish" suffix to Model number, below.

The Single Hole Lavatory Faucet shall be made of solid brass construction. Faucet shall feature a forged brass body incorporating quarter-turn washerless ceramic disc valve cartridges. Faucet shall have a 1.5 gallon (5.7 liter) per minute maximum flow rate. Product shall accommodate single hole configurations. Product shall incorporate a 1-7/16" (3.7 cm) spout height at outlet and a 5-5/8" (14.3 cm) spout reach (c-c). Faucet shall include a pop-up drain with tailpiece and incorporate ADA compliant traditional cross handles. Single Hole Lavatory Faucet shall be Newport Brass Model 932/____ .

t: 949.417.5207 | www.newportbrass.com
©2012 Brasstech, Inc.

932

Product Dimensions *(units are in inches)*

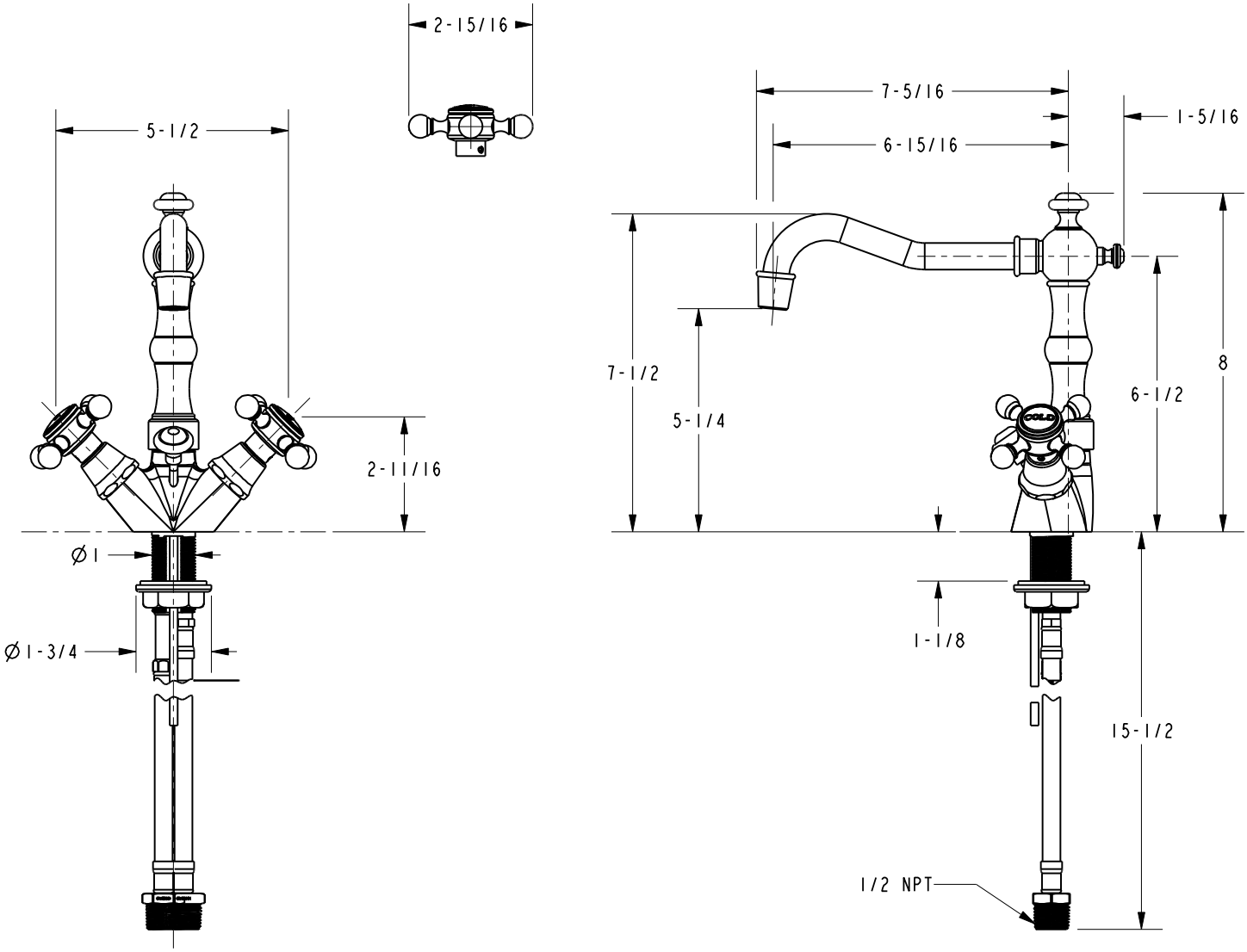

Chesterfield Single Hole Lavatory Faucet
932

NEWPORT BRASS®
Flawless Beauty. From Faucet to Finish.™

t: 949.417.5207 | www.newportbrass.com

©2012 Brasstech, Inc.