Premier Copper Products

ITEM # D-2090RB
1.5" OVERFLOW POP-UP BATHROOM DRAIN

COLOR: OIL RUBBED BRONZE
SIZE: 1.5"

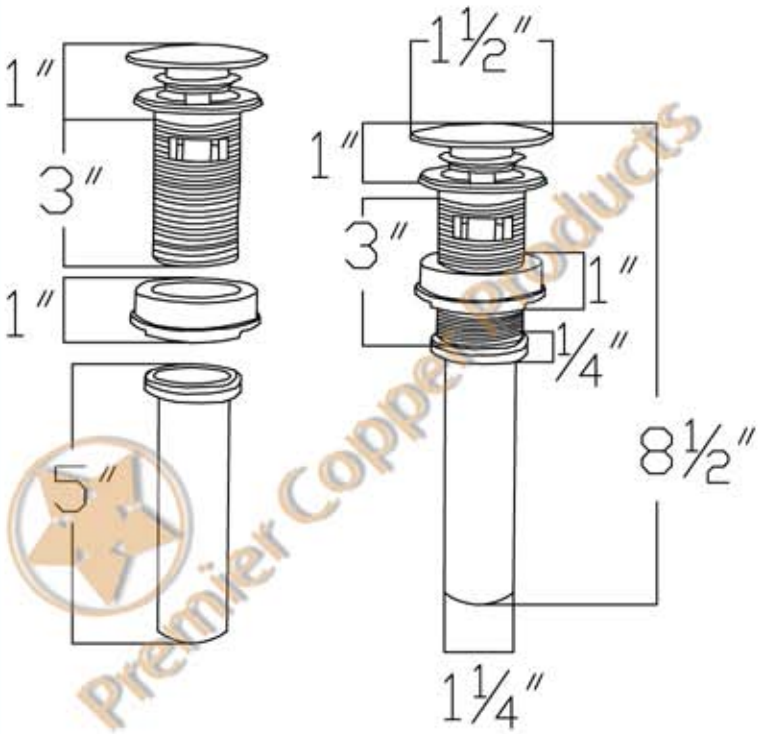

Premier Copper Products