CHEVIOT PRODUCTS INC.

1349 CORNER Overcounter / Wall Mount Lavatory

12 3/4" x 12 3/4" x 5" O.D.

Cheviot Products' vitreous china lavatories are finely crafted for outstanding beauty and practicality. Fired onto each sink is a fine glaze of powdered glass to ensure a lifetime of durability, ease of cleaning, and resistance to bacteria and other microbes.

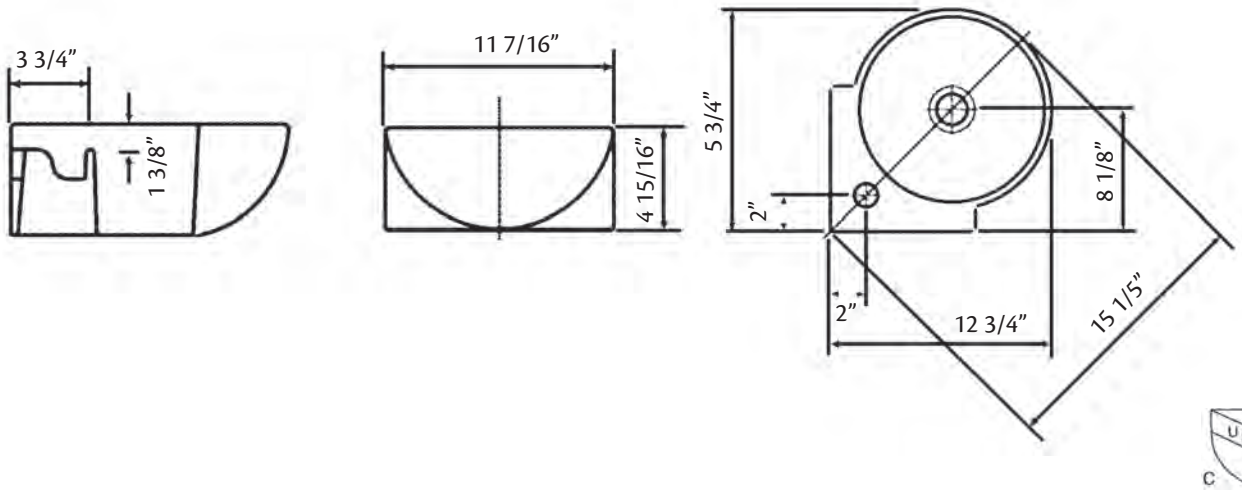

MA Code Approved

Colours: White
Drillings: Single hole drilling only
No overflow hole: 5297 Dome Drain must be used.
Related Products:

5214 CITY
Single Hole Faucet

5216 METRO
Single Hole Faucet

Note: Rough-in dimensions may vary +/- 1/2" and are subject to change. No responsibility is assumed by Cheviot Products Inc.
One Year Limited Warranty against manufacturer's defects.

Cheviot Products Inc. | Tel: 604-464-8966 | Fax: 604-464-8993 | Toll Free: 1-800-444-5969 | Toll Free Fax: 1-800-211-2555
Email: help@cheviotproducts.com | www.cheviotproducts.com
200 - 1594 Kebet Way, Port Coquitlam, B.C. Canada V3C 5M5