PREMIER COPPER PRODUCTS

MODEL NUMBER: BSP1_PVLFDB

DESCRIPTION: Leaf Vessel Hammered Copper Sink with ORB Vessel Filler Faucet, Matching Drain, and Accessories

PACKAGE INCLUDES THE FOLLOWING ITEMS:

* Leaf Vessel Hammered Copper Sink / ORB Finish (Model# PVLFDB)
* Single Handle Bathroom Vessel Faucet / ORB Finish (Model# B-VF01ORB)
* 1.5" Non-Overflow Pop-up Bathroom Sink Drain / ORB Finish (Model# D-208ORB)
* Neutral Cure Copper Sink Installation Silicone (Model# C900-ORB)
* Copper Sink Wax (Model# W900-WAX)

* ORB: Oil Rubbed Bronze

SINK DETAILS (Model# PVLFDB)

* Leaf Vessel Hammered Copper Sink
* Outer Dimension: 21.25" x 12" x 4"
* Inner Dimension: 21.25" x 12" x 4"
* Rim: Wired Rim
* Drain Opening: 1.5" Non-Overflow
* Color: Oil Rubbed Bronze
* CODE / STANDARD COMPLIANCE: IAPMO / cUPC LISTED

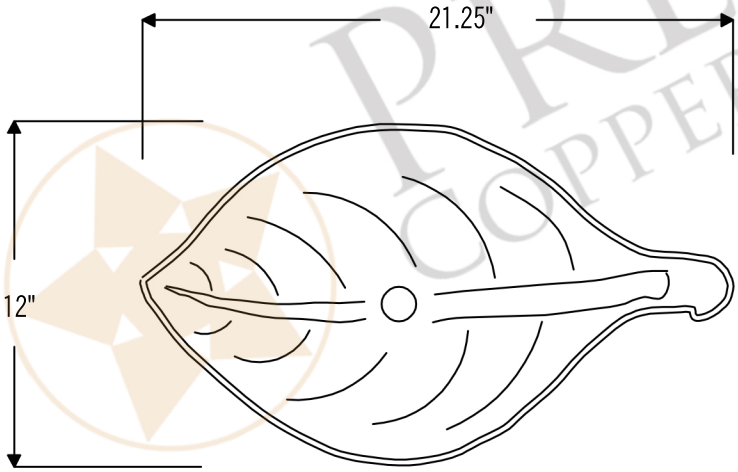

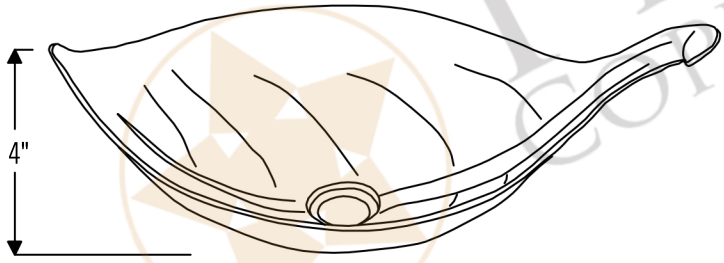

DUE TO THE HAND CRAFTED NATURE OF THIS SINK, SMALL VARIANCES IN COLOR AND SIZE MAY OCCUR.
DO NOT MAKE ANY INSTALLATION CUTS UNTIL YOU RECEIVE YOUR ITEM(S).

PREMIER COPPER PRODUCTS

MODEL NUMBER: BSP1_PVLFDB

DESCRIPTION: Leaf Vessel Hammered Copper Sink with ORB Vessel Filler Faucet, Matching Drain, and Accessories

PACKAGE INCLUDES THE FOLLOWING ITEMS:

* Leaf Vessel Hammered Copper Sink / ORB Finish (Model# PVLFDB)
* Single Handle Bathroom Vessel Faucet / ORB Finish (Model# B-VF01ORB)
* 1.5" Non-Overflow Pop-up Bathroom Sink Drain / ORB Finish (Model# D-208ORB)
* Neutral Cure Copper Sink Installation Silicone (Model# C900-ORB)
* Copper Sink Wax (Model# W900-WAX)

* ORB: Oil Rubbed Bronze

FAUCET DETAILS (Model# B-VF01ORB)

* Single Handle Bathroom Vessel Faucet
* Color: Oil Rubbed Bronze
* Solid Brass Construction
* Ceramic Disc Cartridges
* Overall Height: 14.75"
* ASME A112.18.1/CSA B125.1, NSF/ANSI 61, California Lead Plumbing Law, ADA Compliant

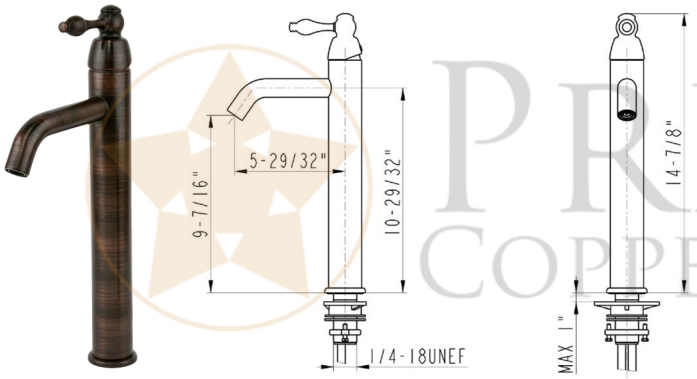

DRAIN DETAILS (Model# D-208ORB)

* 1.5" Non-Overflow Pop-up Bathroom Sink Drain
* Design: Push Pop Top
* Upper Flange Dimension: 2"
* Material: Solid Brass

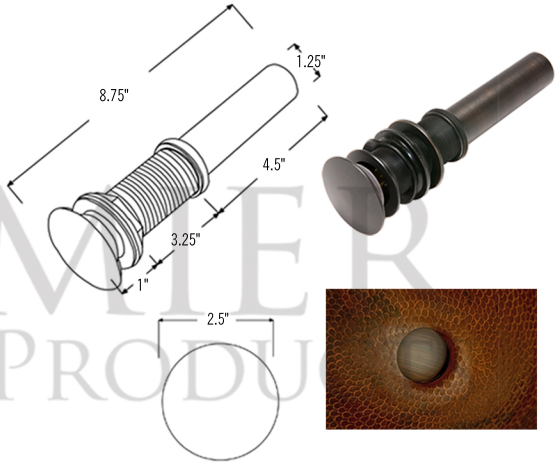

SILICONE DETAILS (Model# C900-ORB)

* Neutral Cure Installation Silicone
* Color: Oil Rubbed Bronze
* Size: 4.7 OZ
* Matches a Variety of Different Styled Sinks and Drains

COPPER SINK WAX DETAILS (Model# W900-WAX)

* Copper Sink Wax & Cleaner
* Made from Natural Bee's Wax
* No Wax Build Up Ever!
* Hard Water Protection
* Works great on a variety of different surfaces:

Copper Sinks & Tubs	*Faucets*
Marble	*Kitchen Cabinets*
Granite	*Wrought Iron*
Countertops	*Glass*
Door Knobs	*Aluminum*
Shower Glass	*Chrome*
Mirrors	*Appliances*
Fine Furniture	*Leather*

DUE TO THE HAND CRAFTED NATURE OF THIS SINK, SMALL VARIANCES IN COLOR AND SIZE MAY OCCUR.
DO NOT MAKE ANY INSTALLATION CUTS UNTIL YOU RECEIVE YOUR ITEM(S).