Schematic

Farmhouse Sink
by **Randolph Morris**

Item #: BCG36DBLPM & BCG36DBC

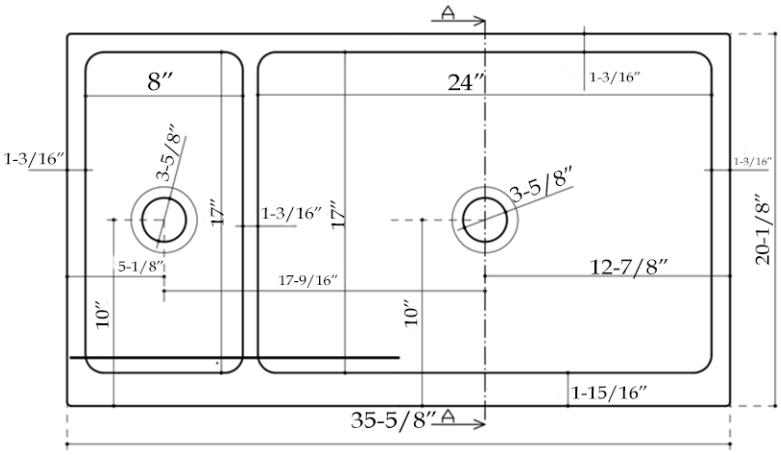

Vista dall'alto
Top View

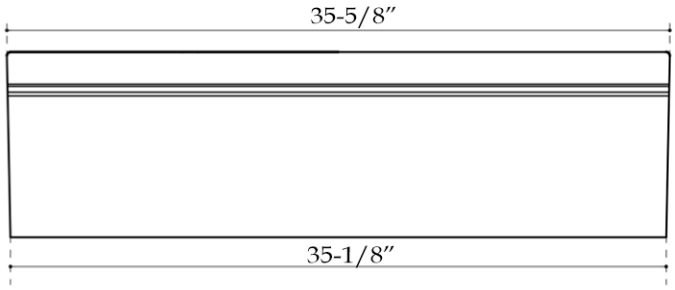

Vista frontale
Frontal View

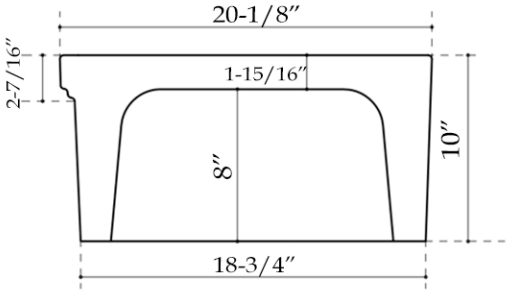

Vista laterale
Lateral View

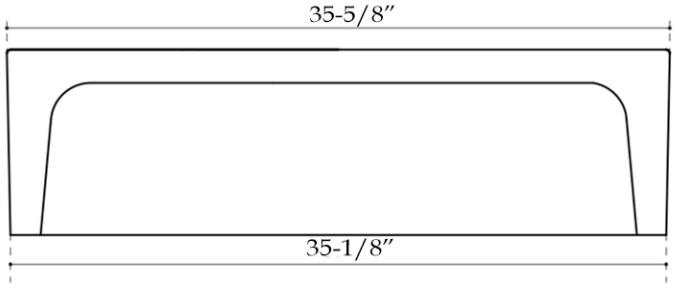

Vista posteriore
Back view

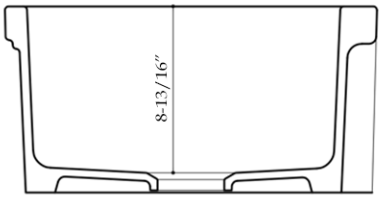

Sezione A-A
Section A-A

All products and specifications are subject to change without notice. Randolph Morris is not responsible for typographical and/or dimensional errors. Typographical errors are subject to correction.

Note: Rough-in dimensions may vary +/- 1/2″ and are subject to change. No responsibility is assumed by Randolph Morris.