Instllation Manual

1, Technical Parameters

Recommend water pressure	0.5bar≤P≤7.5bar
Recommend hot water temperature	50-60°C
Highest hot water temperature	80°C
Install aperture	35mm
Installation thickness max	30mm

2, Required tools

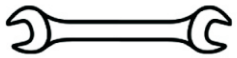

Adjustable wrench

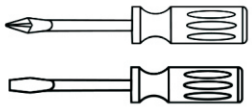

screwdriver

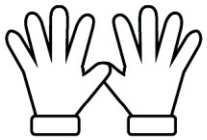

gloves

3, Notice

1. The inlet pipe cannot be bent excessively. (Figure 1)

2. The inlet pipe is not twisted excessively. (Figure 2)

3. The maximum thickness of the mounting plate is 30mm. (Figure 3)

4. Left is hot, right is cold. (Figure 4)

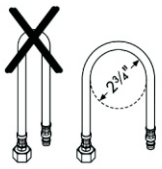

Figure 1

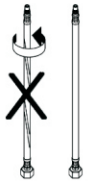

Figure 2

Figure 3

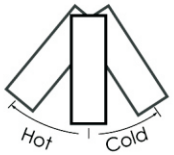

Figure 4

4. Faucet instllation

1

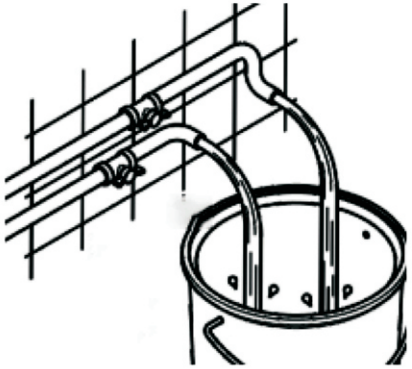

1, Please flush the water pipe for at least 2 minutes before installation, ensure that no impurities interference, and supplies hot and cold water from angle valve.

2

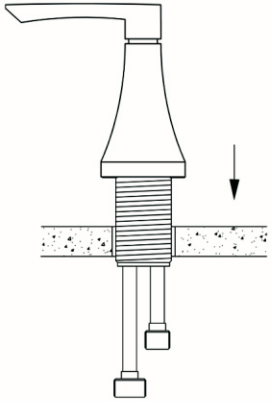

2, Pass the body (left/hot) through the reserved hole of the basin

3

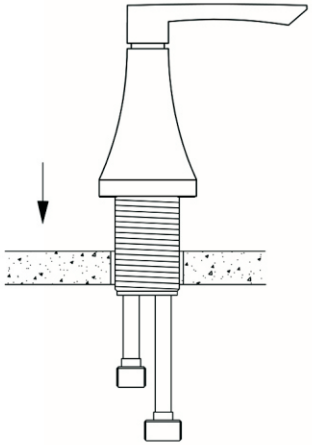

3, Pass the body (right/cold) through the reserved hole of the basin

4

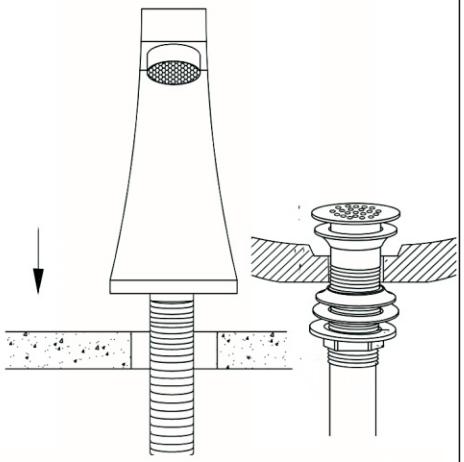

4, Pass the spout through the reserved hole of the basin

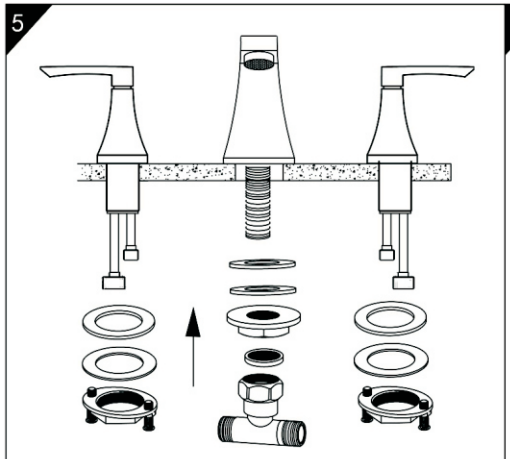

5,Connect the inlet hose ② and the threaded pipe ④to the tap through the mounting hole, adjust the direction of the tap. Put the gasket ⑤ (a is up, b is down) into the threaded pipe and install the plastic nut in the thread tube ④ and tighten, to ensure that the faucet does not swing rotation.

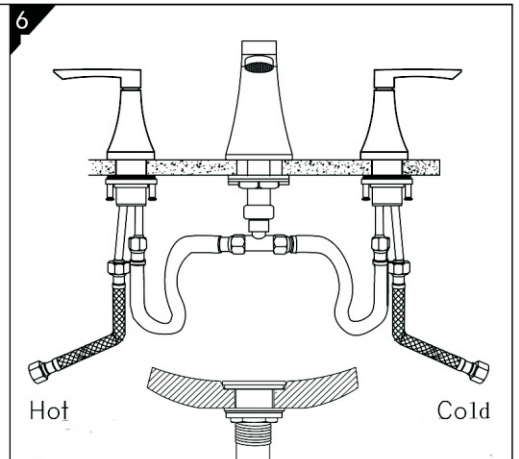

6, Connect the inlet hose ① to the angle valve the tube connected to the hot water angle valve, and the cold water angle valve, ② with the angle valve and the main body of the faucet whether is leaking, installation is completed.

5, Operation and Maintenance

Operation and Maintenance

Modern bathroom faucets, kitchen faucets and shower products are made of different materials to meet the design and functional requirements of the market.

In order to avoid damage to the product, it is necessary to properly maintain them.

Optimum Effect:

1. If necessary, clean your shower products to prevent the accumulation of dirt.
2. Choose a cleaning agent designed specifically for the product type.
3. Don't use the following detergent to clean your product:

- Avoid contact with any acid-containing cleaning agents, polish abrasives or rough agent.
- Frosted powder, mat or brush.
- Steam cleaner.
- No cleaning effect of cleaning agent.

4. Use cleaning agent full according to the manufacturer's instructions completely.
5. Do not mix detergent, except under the guidance of the manufacturer.
6. Do not spray the cleaner directly on the product because the drip will enter the gap and cause damage. When using a spray cleaner, spray the detergent onto a soft cloth or sponge.
7. Wash faucet with clean water, and wipe with soft cloth.

6, Notice

1. Soap and shampoo residue can cause damage to the goods. Clean with water after use.
2. Pots, tiles, hose residues will damage the faucet and immediately clean the detergent residue on the shower.
3. Improper cleaning or inappropriate detergent results in product damage not covered by the warranty.
4. If a part of the product is damaged, replace it because there is a risk of injury.

7, Warranty

Applicable Warranty

This warranty applies only to the original purchaser and this warranty is non-transferable.

Warranty Content

Only guarantee the products manufactured by our company. A warranty that guarantees a defect in material or workmanship as follows:

1. Under normal circumstances installation, use and service, with the presence of defects, we can replace the product or any part of the product, and guaranteed not to make any charge for spare parts.
2. If we can not provide a replacement, or if it can not be repaired in time, we will choose to refund the purchase price in return for the return of the product.

Warranty Period

As the two following, replace or repair the portion of the product will be covered under the warranty period.

Personal consumers purchase for personal use of the family, the metal parts of the product, the company provides 2-year warranty. Shower and other wearing parts, provides 1 year warranty.

Damage caused by the following acts is not within the scope of the Company's product quality assurance:

A. Due to improper use of the product or not to use the product as required.
B. Incorrect product installation and debugging.
C. Normal wear and tear of products, improper operation.
D. Poor product maintenance.
E. Use tools and equipment that are not suitable for the product.
F. The effects of chemical etching, electrochemical, or electrical factors.