Schematic

67 Inch Acrylic Verticle Fluted Tub
by **Randolph Morris**

Item #: RMTW7682-67

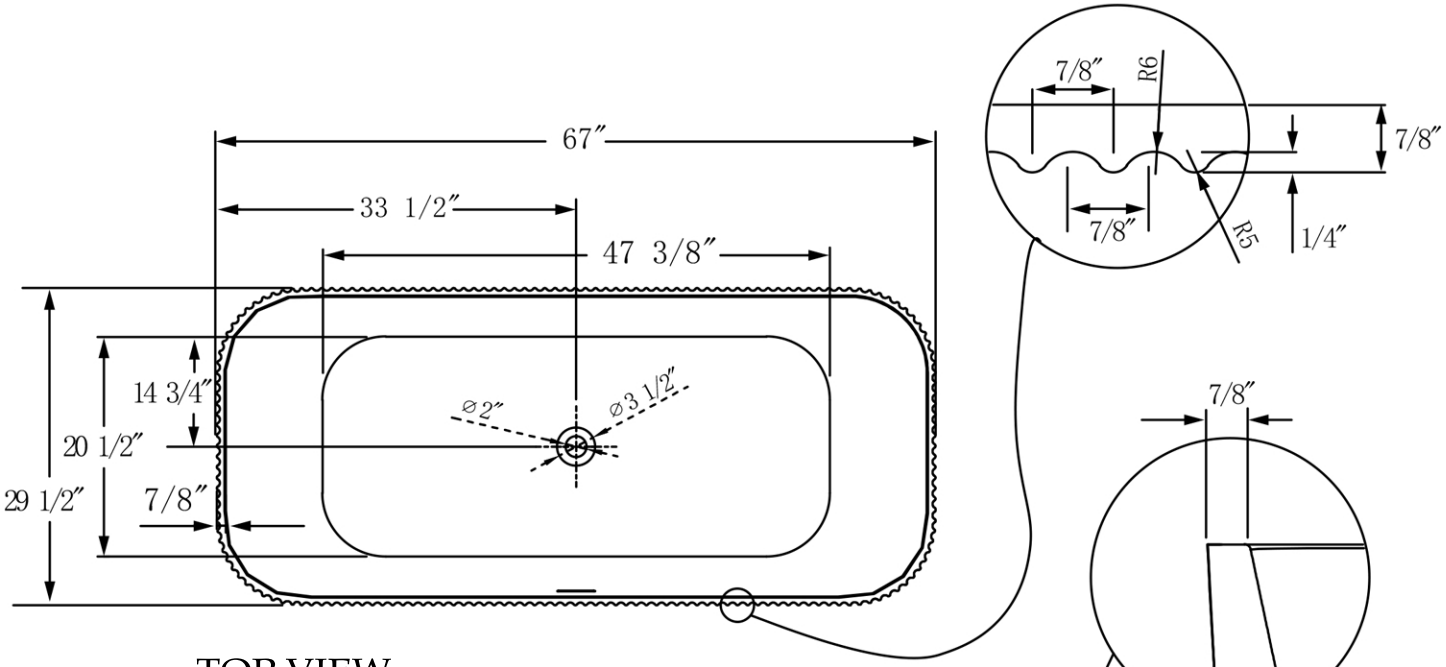

TOP VIEW

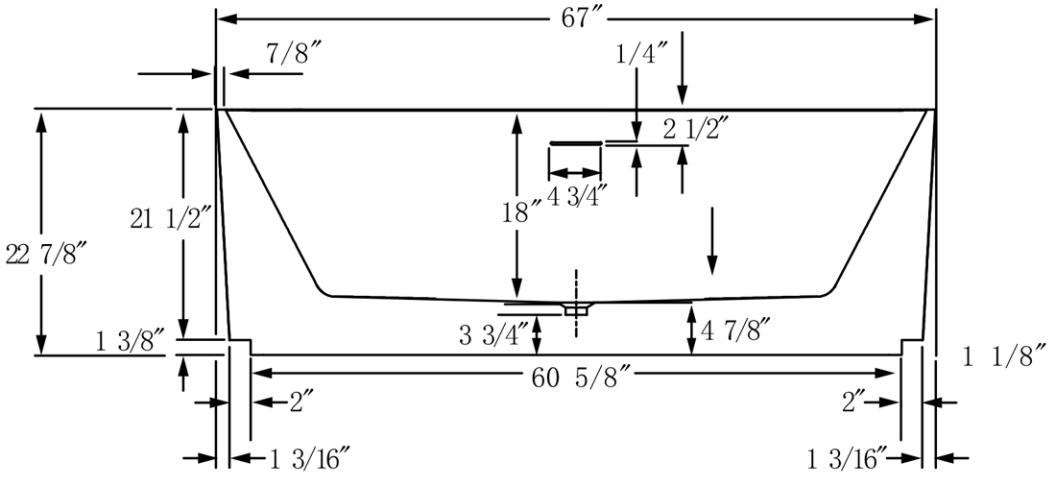

FRONT VIEW

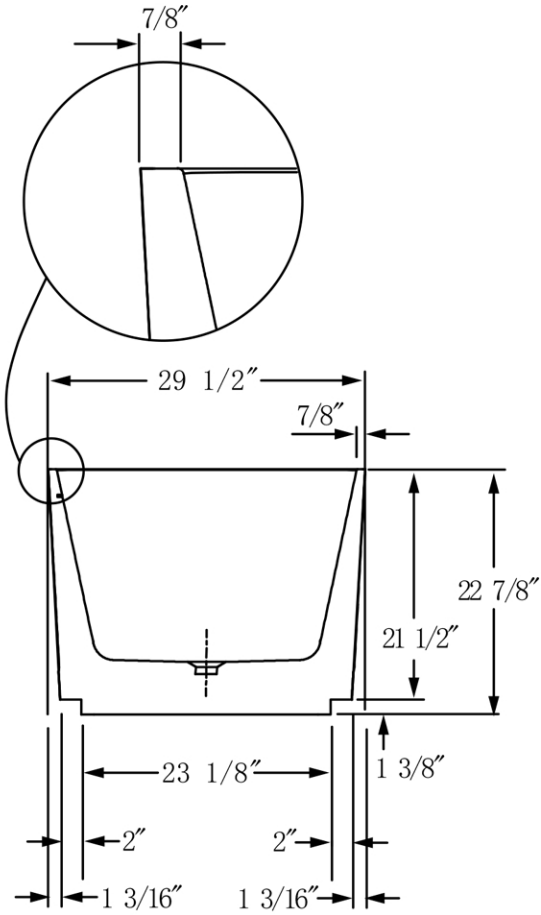

SIDE VIEW

All products and specifications are subject to change without notice. Randolph Morris is not responsible for typographical and/or dimensional errors. Typographical errors are subject to correction.

Note: Rough-in dimensions may vary +/- 1/2″ and are subject to change. No responsibility is assumed by Randolph Morris.