Schematic

70″ Acrylic Double Slipper Claw Foot Tub
by Randolph Morris

Item #: RMA70DS0

NOTE: Tub dimensions may vary +/- ½ inch and are subject to change. For best results, Randolph Morris and Vintage Tub and Bath STRONGLY recommend that you have the tub on site before installing rough-in plumbing. Randolph Morris and Vintage Tub and Bath assume no responsibility for improper rough-in installation.

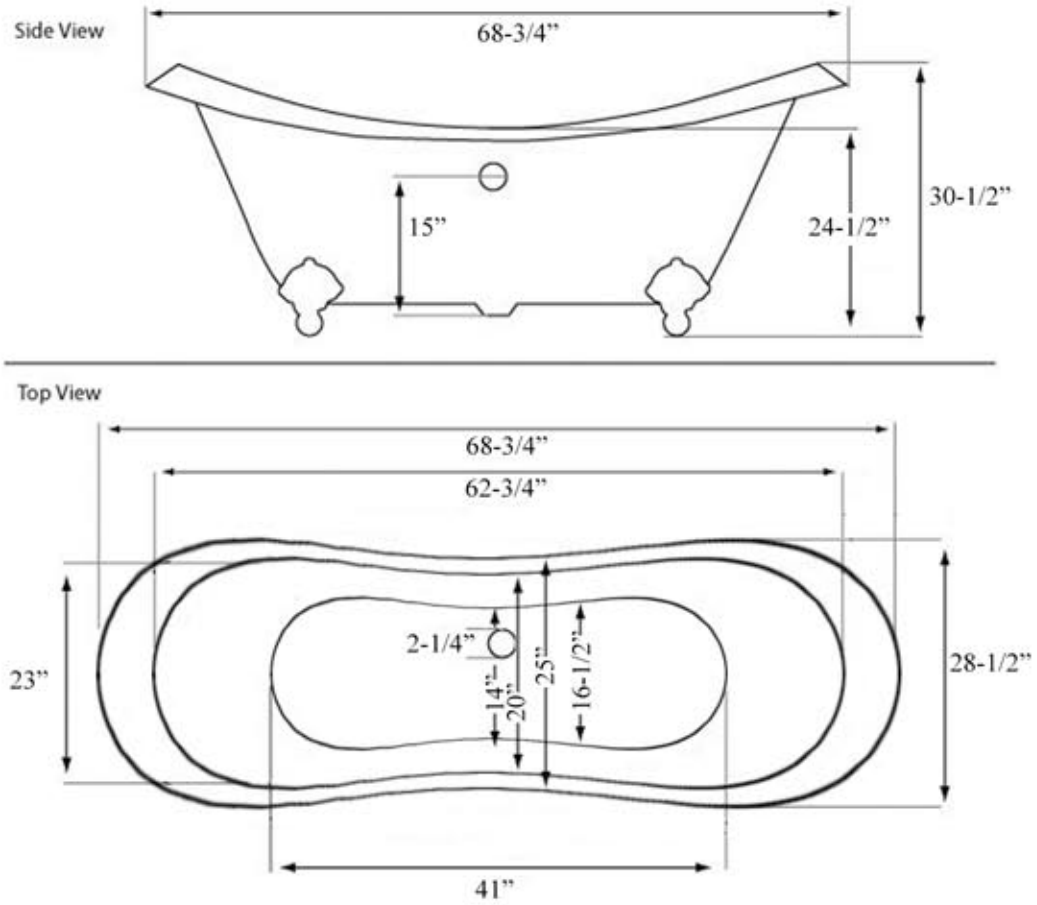

Water Depth: 12-3/4"

Weight: 115 lbs

Water Capacity: 52 G

All products and specifications are subject to change without notice. Randolph Morris is not responsible for typographical and/or dimensional errors. Typographical errors are subject to correction.