USADF

Acrylic 71” Dual on Feet

Water Capacity	82 Gal.
Empty Tub weight	134 lbs.
Filled Tub Weight	656 lbs.
Shipping tub weight	176 lbs.
Max Water Depth	13”
Hole Diameters	
Faucet	1-3/8”
Drain	2”
Overflow	2-1/2”

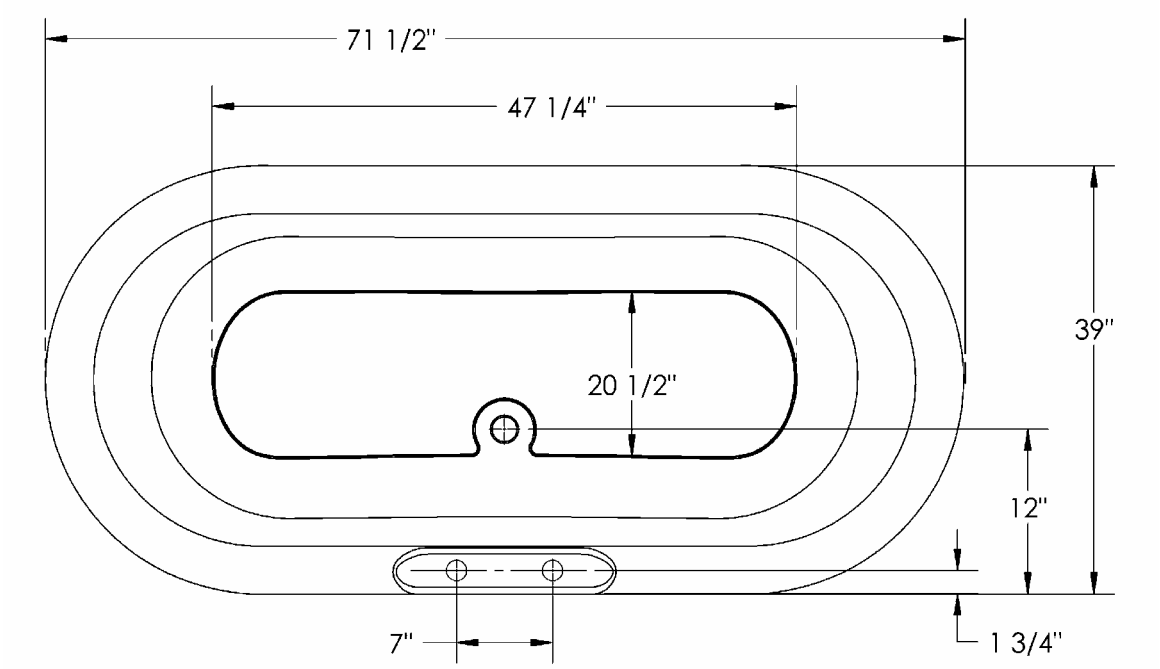

These dimensions are for reference only, and can vary +/- ¼”. If exact measurements are required, please use the actual tub to be installed.

Revised 2/16/05

USADF

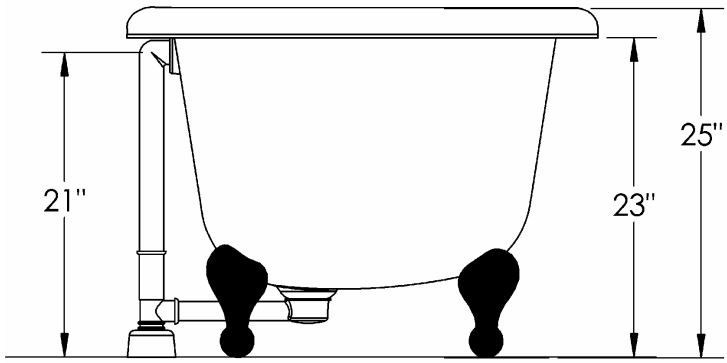

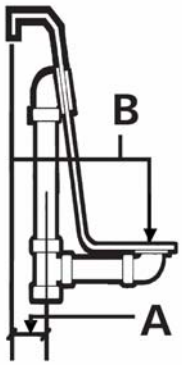

A = 2 5/8”

B = 12 1/4”

These dimensions are for reference only, and can vary +/- ¼”. If exact measurements are required, please use the actual tub to be installed.

Revised 2/16/05