Sierra Copper

Trenton 19

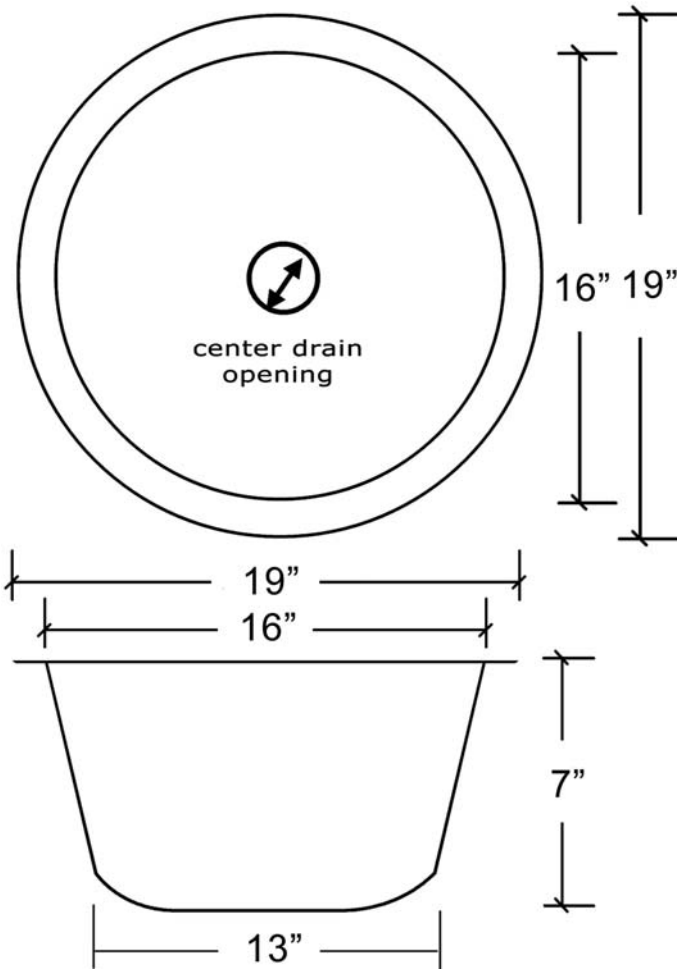

FEATURES

O.D. - **19” x 19” x 7”**
I.D. - **16” x 16”**
Drain Opening - **2” or 3.5”**
Gauge - **16**
Texture - **Hand Hammered**
Finish Choice - **Antique, SN**
Installation - **drop in or under mount**
Recommended Drain - **SC-DRN-220, SC-DRN-214, SC-DRN-2089**

Please be aware that all rustic copper sinks and tubs have a finish that is by nature uneven and variable in color and pattern. the patinas are created by a firing process that will change over time, developing more interest and variation. A copper finish is a living finish and never really stops changing in color. These variations are part of the rustic character and charm and do not consitiute defects.
Sierra Copper products are hand hammered by the finest Copper Artisans in Mexico. Because each piece is a work of art, depicting the exclusive style and technique of the Artisan, no two finished products will be exactly alike. For this reason, the dimensions and consistency of shape can vary in size up to 1/2”.

IAPMO LISTED | UPC | cUPC

11522 Pagemill Road | Dallas, Texas 75243
www.SierraCopper.com | 877.732.0382 | 214.503.8409