Tub Wall Mount High Spout Faucet with Handshower

by Randolph Morris
Item #: RM376
Unpack and check all the parts, and read the instructions

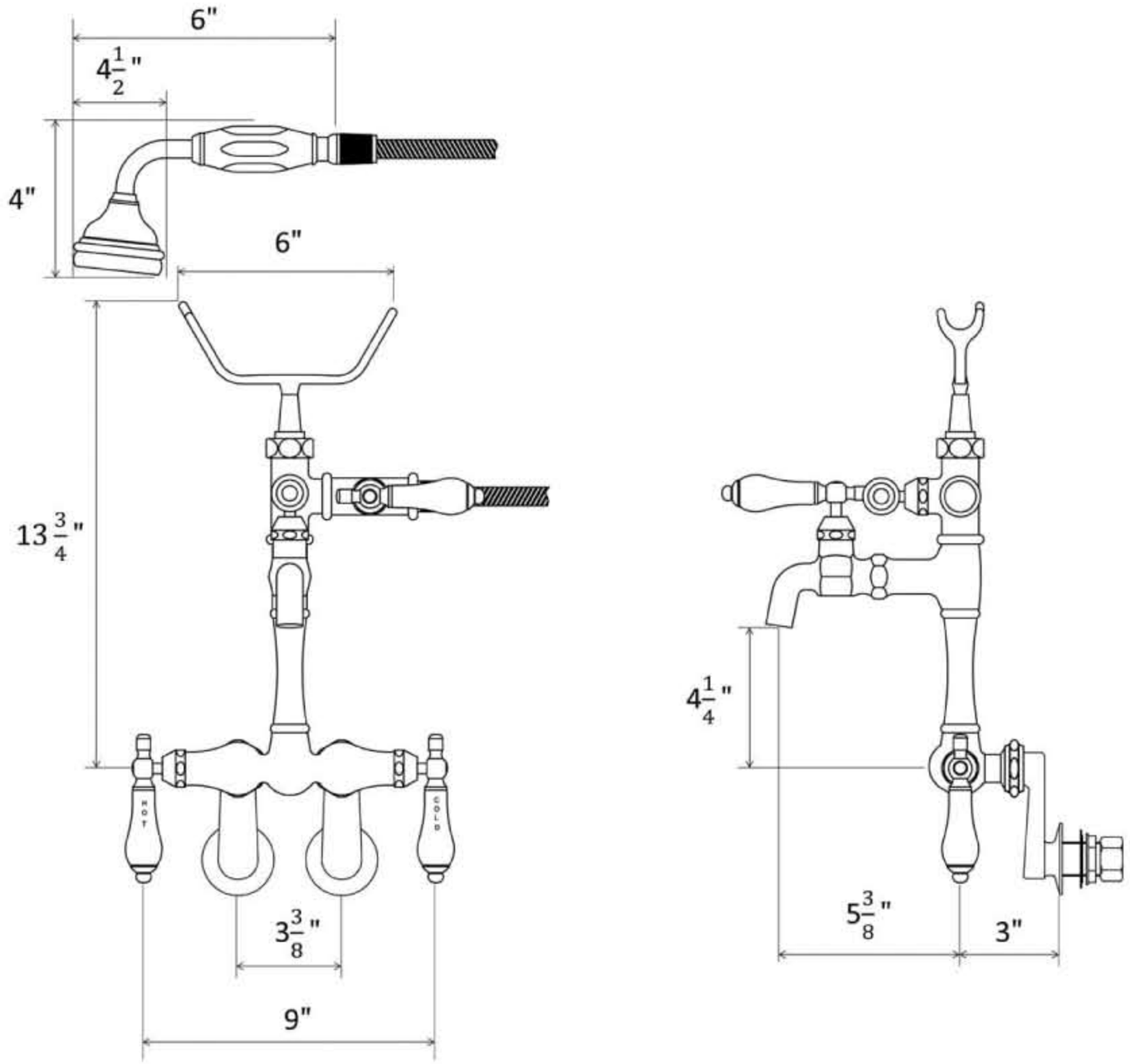

All products and specifications are subject to change without notice. Randolph Morris is not responsible for typographical and/or dimensional errors. Typographical errors are subject to correction.

Note: Rough-in dimensions may vary +/- 1/2" and are subject to change. No responsibility is assumed by Randolph Morris.