RESTORIA™ Antique Bathtubs

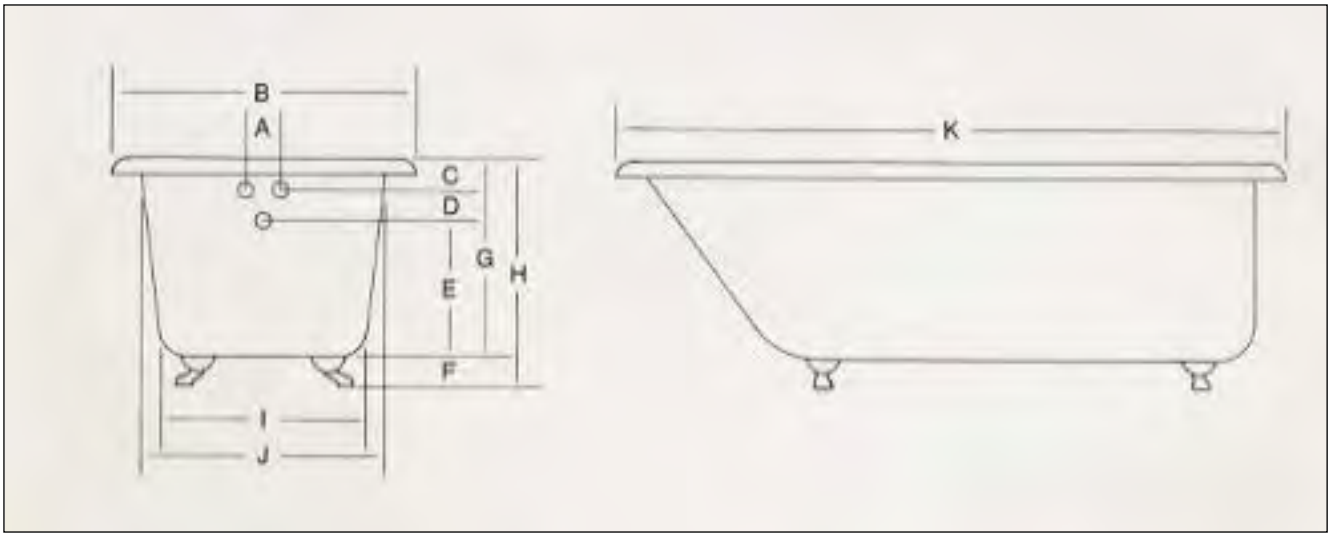

Dimensions	Regent	Monarch
A. Fauet spread	3 ⅜" or 7” Rim Mount	3 ⅜" or 7” Rim Mount
B. Outside width	30"	30”
C. Top to faucet	3"	3”
D. Faucet to overflow	3"	3”
E. Overflow to bottom	12"	12”
F. Bottom to floor	4 ¾"	4¾"
G. Depth	16 ½"	16 ½"
H. Top to floor	21 ¼"	21 ¼"
I. Base width	20"	20”
J. Interior width	23"	23”
K. Outside length	60"	66”
L. Weight	100 lbs. approx	100 lbs. approx