Elizabethan Classics

Specification for ECRT54TW

Hole	Diameter
Drain	2" +/- 1/8
Over Flow	2-1/4" +/- 3/16
Faucet	1-3/8" +/- 1/8
Capacity	29 US Gallon
Weight of Tub	209.44 lbs
Weight of Tub filled with water	453.64 lbs

Top View

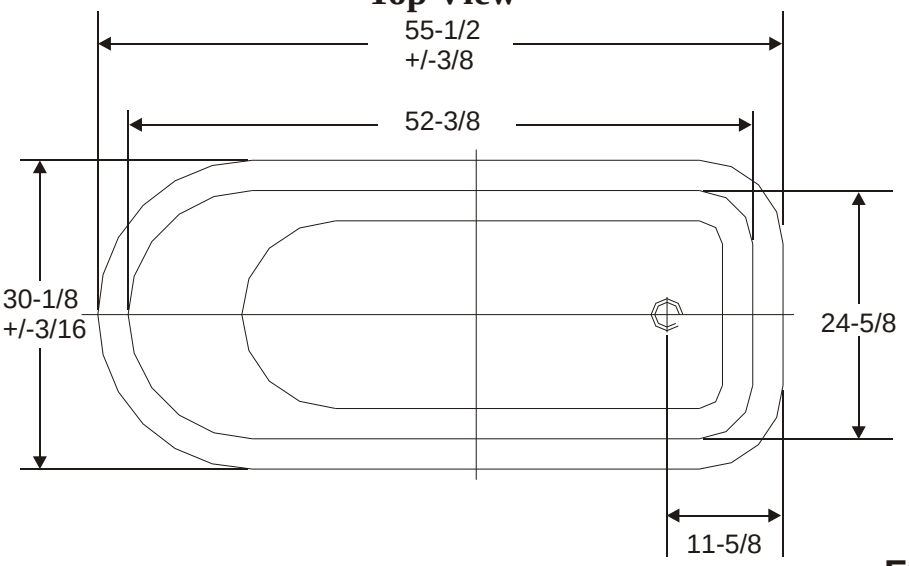

End View

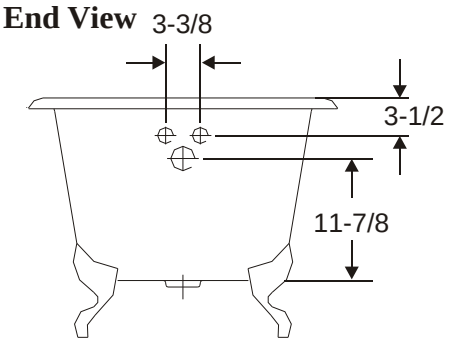

FSMR Feet Placement Diagram

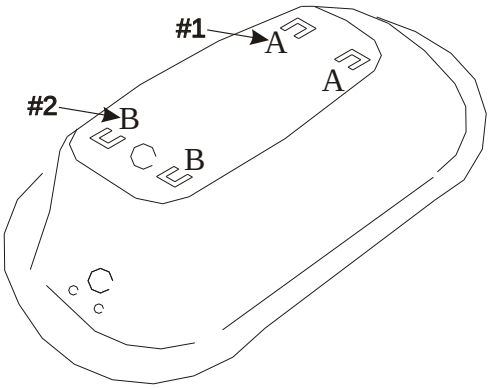

Side View

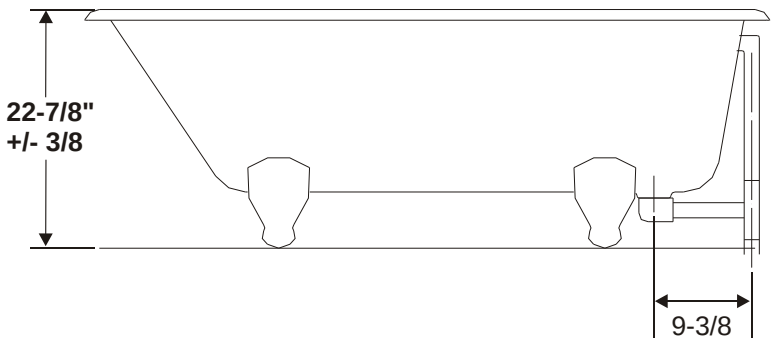

Rev. Date:11/01/05'