ITEM # KASB33229
33" ANTIQUE KITCHEN APRON SINGLE BOWL SINK

OUTER DIMENSIONS: 33"X22"X9"
INNER DIMENSIONS: 31"x19"x9"
DRAIN SIZE: 3.5" STANDARD
MATERIAL GAUGE:14

CODE/STANDARD COMPLIANCE
* IAPMO/cUPC LISTED

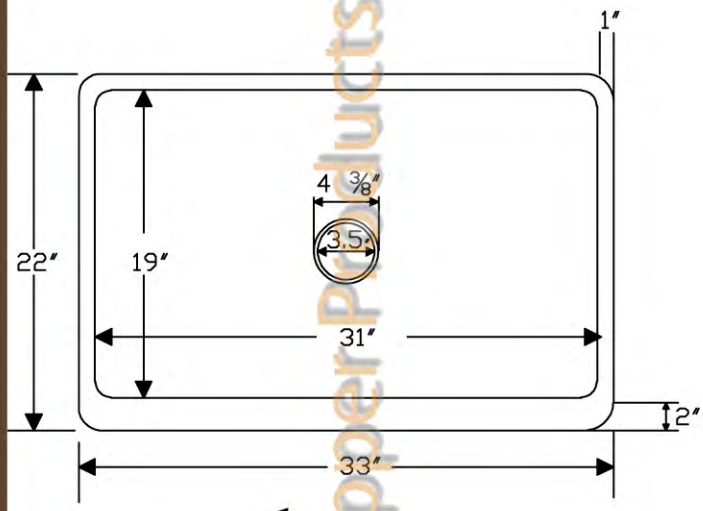

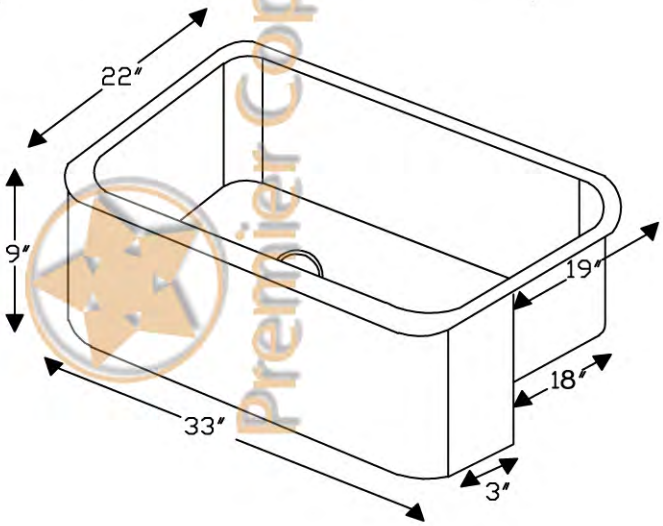

Premier Copper Products

IMPORTANT: THIS PRODUCT IS HAND CRAFTED AND SMALL VARIANCES MAY OCCUR. DIMENSIONS MAY VARY UP TO 1/4". DO NOT MAKE ANY INSTALLATION CUTS UNTIL YOU RECEIVE YOUR SINK.