DEC061

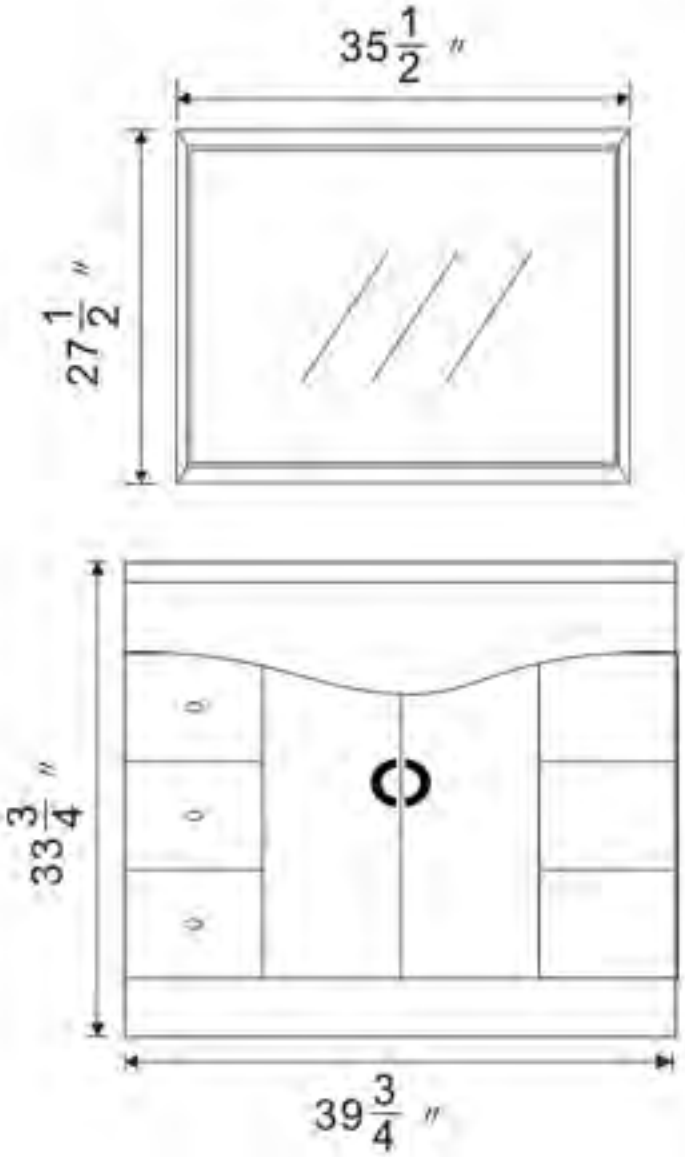

FRONT VIEW

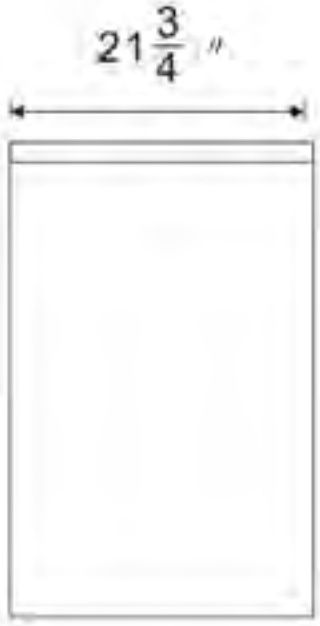

SIDE VIEW

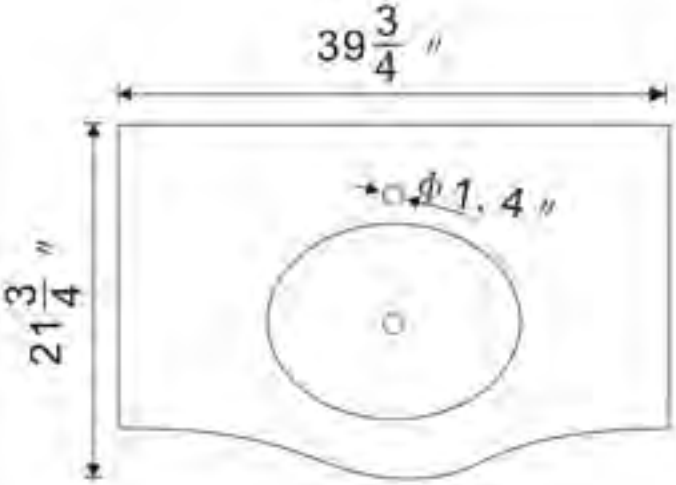

TOP VIEW

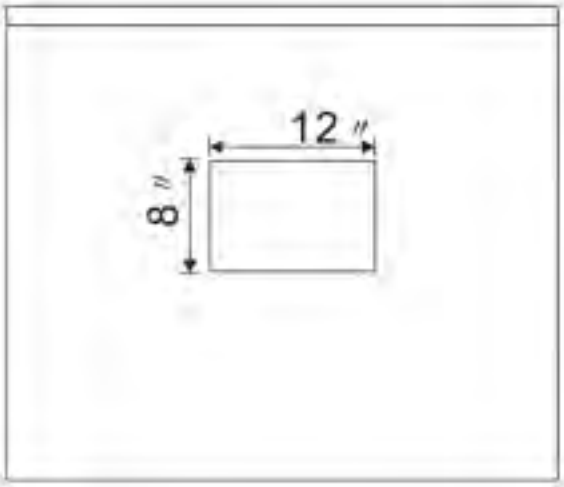

BACK VIEW