TOTO®

CST744EL

Eco Drake® Close Coupled Toilet, ADA, 1.28GPF

FEATURES

- E-Max® flushing system, low consumption (1.28GPF/4.8LPF)
- Universal Height
- Two-piece design with high-profile tank
- Elongated front bowl and tank set, less seat
- Chrome trip lever
- 12" Rough-in, less supply
- ADA compliant

MODELS

- CST744EL
  Elongated bowl, 12" rough-in, less seat

- CST744ELR*
  Same as CST744EL with right hand trip lever (special order)

- CST744ELRB*
  Same as CST744EL with right hand trip lever and bolt-down tank lid (special order) (#01 Cotton only)

COMPONENTS

- C744EL - Elongated Front Bowl
- ST743E - Tank and Cover only - Left-hand trip lever
- ST743ER - Tank and Cover only - Right-hand trip lever
- ST743ERB - Tank and Cover only - Right-hand trip lever and bolt-down tank lid (#01 Cotton only)

- SS114 SoftClose® seat (sold separately)
- SS204 SoftClose® seat (sold separately)
- SC134 commercial seat (sold separately)
- SC534 commercial seat (sold separately)

COLORS/FINISHES

- #01 Cotton
  #03 Bone
  #11 Colonial White
  #12 Sedona Beige
  #51 Ebony

PRODUCT SPECIFICATION

The two-piece E-Max flushing system toilet shall be 1.28GPF/4.8LPF. Toilet shall be universal height and ADA compliant. Toilet shall have high-profile tank, elongated front bowl and chrome trip lever. Toilet shall be TOTO Model CST744EL____.

E-MAX™ FLUSHING SYSTEM BY TOTO®

CODES/STANDARDS

- Meets and exceeds ASME A112.19.2/CSA B45.1
- Certifications: IAPMO(cUPC), EPA Watersense, State of Massachusetts , City of Los Angeles, and others
- Code compliance: UPC, IPC, NSPC, NPC Canada, and others
- Legislative Compliance: California AB715, California Green Building Code, City of Los Angeles Water Efficiency Ordinance
- ADA compliant (when installed with trip lever located on the approach side)

CST744EL

Eco Drake® Close Coupled Toilet, ADA, 1.28GPF

SPECIFICATIONS

- Water Use — 1.28 GPF/4.8LPF
- Flush System — E-Max
- Min. Water Pressure — 8 psi (static)
- Water Surface — 10-3/8" x 8-1/4"
- Trap Diameter — 2-1/8"
- Rough-in — 12"
- Trap Seal — 2-3/8"
- Warranty — One Year Limited Warranty
- Material — Vitreous china
- Shipping Weight — C744EL - 56.5lbs
  ST743E(R)(B) - 35lbs
- Shipping Dimensions — C744EL
  29-1/2"L x 16"W1
  x 10-1/4"W2 x 18-1/4"H

  ST743E(R)(B)
  20-1/8"L x 8-1/4"W
  x 15-1/2"H

INSTALLATION NOTES

Back-to-Back Toilet Installations:
TOTO recommends the use of a nationally listed, double sanitary tee-wye only, in vertical waste stacks, in accordance with the stipulations noted in the majority of nationally recognized plumbing codes.

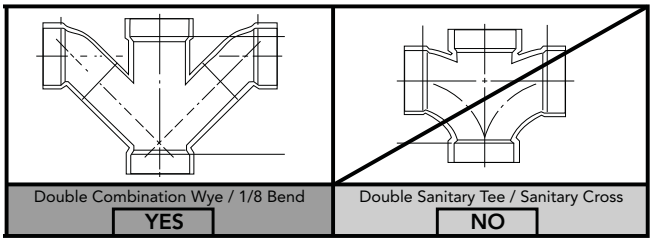

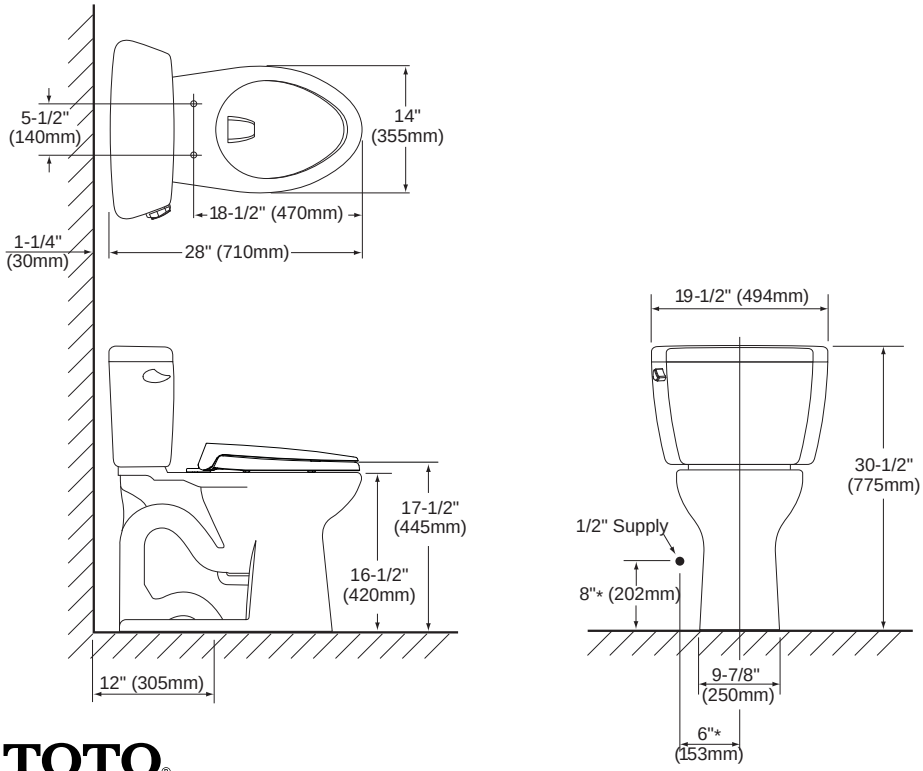

TOTO®

These dimensions and specifications are subject to change without notice

Ph: (888) 295-8134 | Fax: (800) 699-4889 | www.totousa.com

SS-00214 v.06

Printed in U.S.A. | © TOTO USA 12/12 | Printed on recycled paper ♻