CHEVIOT PRODUCTS INC.

2165 CARLTON Bath with Pedestal Base and continuous rolled rim

Cheviot Products' cast iron bathtubs are handmade in Europe with the finest materials. Fired with a thick coating of AA grade titanium-based enamel for unparalleled hardness and non-porosity, the extremely durable surface is easy to clean and resistant to stains, bacteria, and other microbes. Cast iron also keeps your bath warm for the longest possible time.

Model 2164 Shown

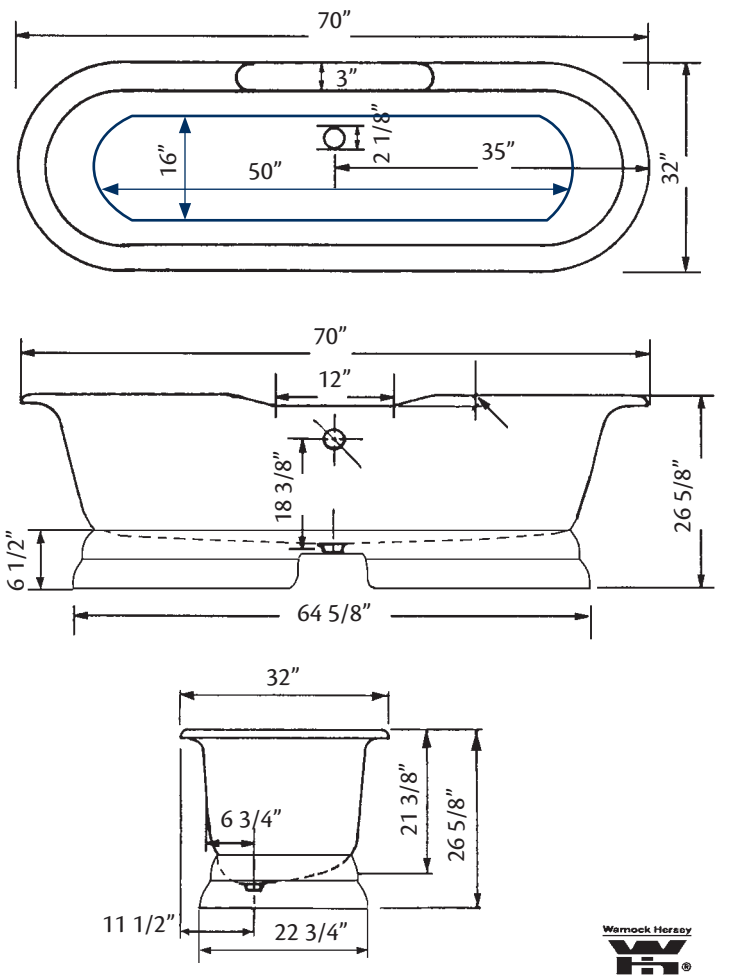

Warnock Hersey

MA Code Approved

70" x 32" Wide x 26" Tall
395 lbs, 63 gallons
Colours: White, Custom Colour Exterior

Related Products:

5115LEV Tub Filler With Hand Shower

5100 Tub Filler With Hand Shower

3970 Heavy Duty Water Supply Lines

2222 Waste & Overflow

Note: Rough-in dimensions may vary +/- 1/2" and are subject to change. No responsibility is assumed by Cheviot Products Inc.
One Year Limited Warranty against manufacturer's defects.

Cheviot Products Inc. | Tel: 604-464-8966 | Fax: 604-464-8993 | Toll Free: 1-800-444-5969 | Toll Free Fax: 1-800-211-2555
Email: help@cheviotproducts.com | www.cheviotproducts.com | 200 - 1594 Kebet Way, Port Coquitlam, B.C. Canada V3C 5M5