CORPORATE OFFICE:
Mail: PO Box 941245
Plano, TX 75094-1245
Shipping: 2603 Technology Drive
Plano, TX 75074

BANNER
BRASS WASHERLESS FAUCETS®

Phone: (972)312-1707
(800)346-8435
Fax: (972)398-9948
E-Mail: banner@woodmark1.com
Web Site: www.bannerfaucets.com

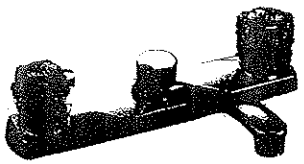

AVAILABLE FINISHES IN:
CHROME

120 SERIES

TWO ACRYLIC HANDLE KITCHEN FAUCET
WITH OR WITHOUT SPRAY ASSEMBLY

* ALL METAL HOUSING
* SOLID BRASS WATERWAYS
* QUARTERTURN WASHERLESS OPERATION
* LIFETIME LIMITED WARRANTY
* UPC LISTED
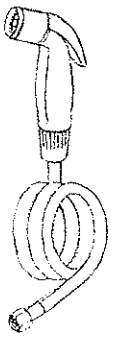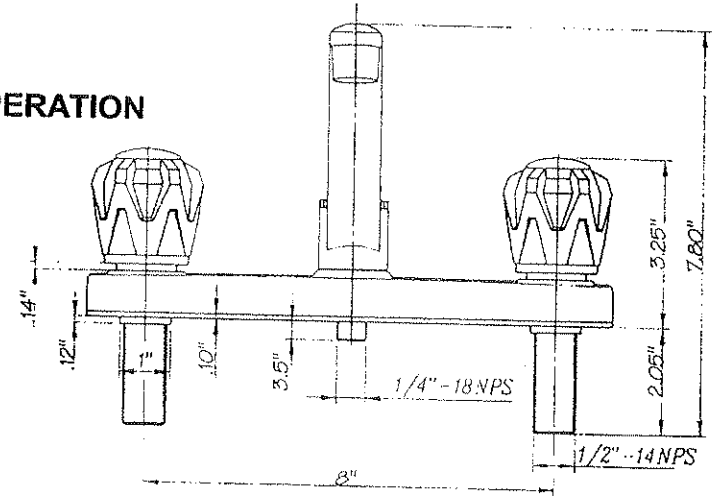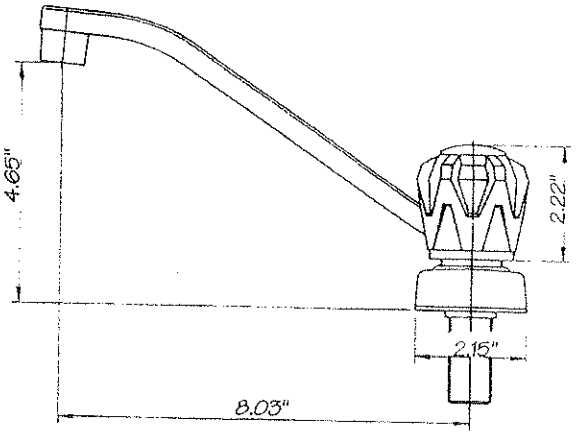
Models: 121-D
122-D