MOEN®
COMMERCIAL

Specifications

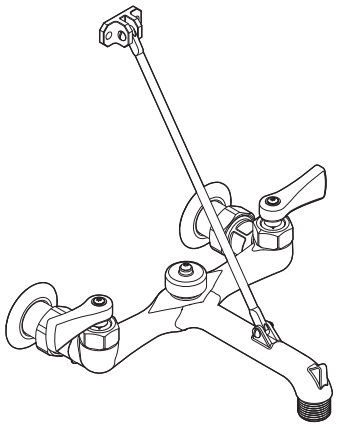

Two-Handle Service Sink Faucet

Model: 8230 (Chrome)

BUY AMERICAN ACT COMPLIANT

FAUCET DESCRIPTION
- Brass construction, rough chrome finish
- Integral vacuum-breaker
- 3/4" Garden hose threaded spout
- 1/2" IPS eccentric connections
- "Service stops"
- "Wall mounting bracket"
- Vandal resistant torx head screws

OPERATION
- Lever style handles with hot and cold color indicators

FLOW
- Unrestricted

CARTRIDGE
- Brass shell ceramic disc cartridge
- 1/4 turn operation

STANDARDS
- Third party certified by IAPMO and CSA to meet ASME A112.18.1M and all applicable specifications referenced therein
- **ADA** for lever handles

WARRANTY
- Warranted for 5 years against material or manufacturing defects

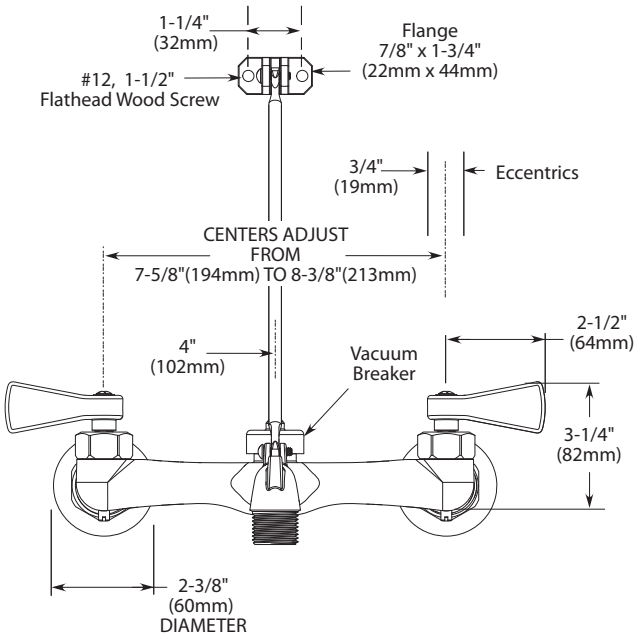

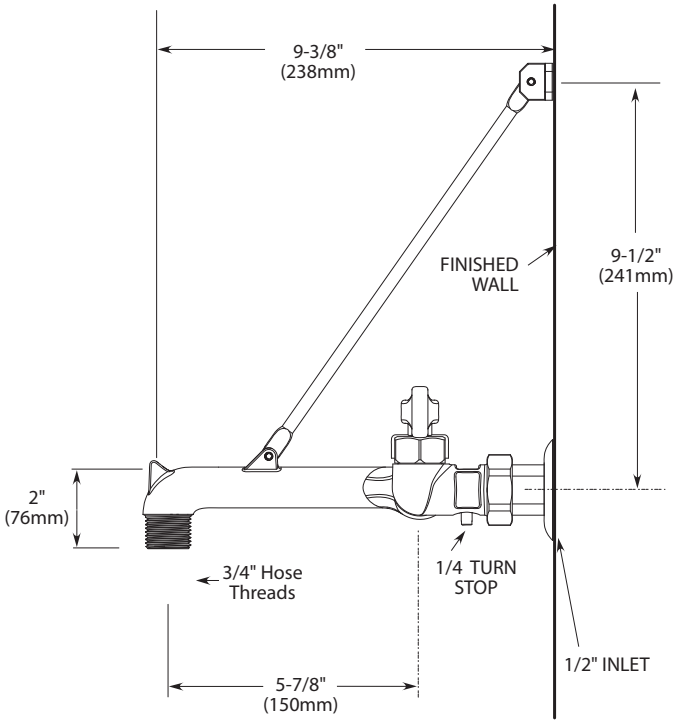

CRITICAL DIMENSIONS

(DO NOT SCALE)