SINK SPECIFICATIONS

BLANCO SPEX™ 1-1/2 Bowl Undermount

Model 440312

FEATURED MODEL

440312 1-1/2 Bowl, 7-1/4" & 5-1/4" bowl depths

FEATURES

- Required outside cabinet: 36"
- 20 gauge, 304 series stainless steel
- Premium 18/8 chrome/nickel content
- Satin finish
- Rear drain placement
- Sound deadening insulation

OPTIONAL ACCESSORIES

Stainless Steel Sink Grid:	221033
Colander:	440492

CODE/STANDARDS COMPLIANCE

ASME 112.19.3-00
IAPMO/UPC listed

NOMINAL DIMENSIONS

Model 440312 shown

OVERALL	CUT OUT SIZE	BOWL DEPTHS LEFT	BOWL DEPTHS RIGHT	DRAIN
32" x 18"	Template provided with approximate 1/8" reveal	7-1/4"	5-1/4"	3-1/2"

DXF cutout templates available on our website.

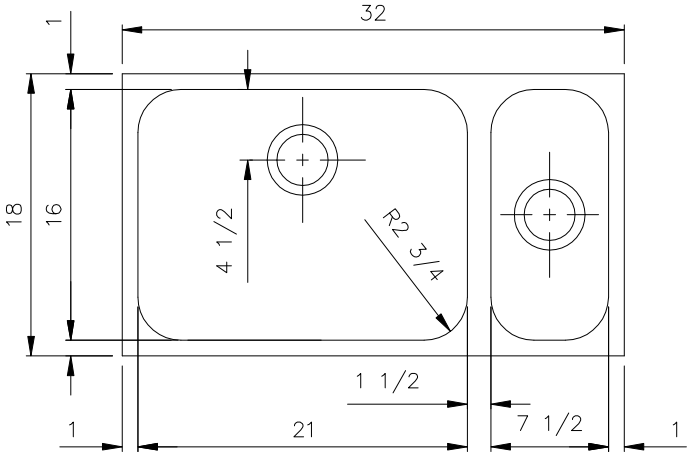

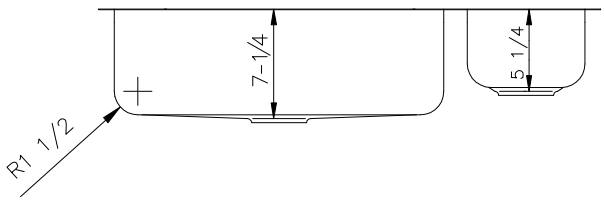

WARRANTY

Blanco America's Stainless Steel sinks feature a LIMITED LIFETIME WARRANTY to be free of all manufacturing defects under normal use. See our complete warranty for details.

While Blanco America endeavors to provide accurate information, all dimensions are nominal, cannot be guaranteed, and are subject to change or cancellation. Blanco America assumes no responsibility for use of superseded or voided specifications.

JOB INFORMATION

Job Name: _____

Contact: _____

Date Specified: _____

Specifier: _____

Contractor: _____

BLANCO AMERICA
800.451.5782
www.blancoamerica.com

© 2013 BLANCO AMERICA