Stack-O-Matic™

CROSLEY®

CR32CD

CATHERDRAL CD

Instruction Manual

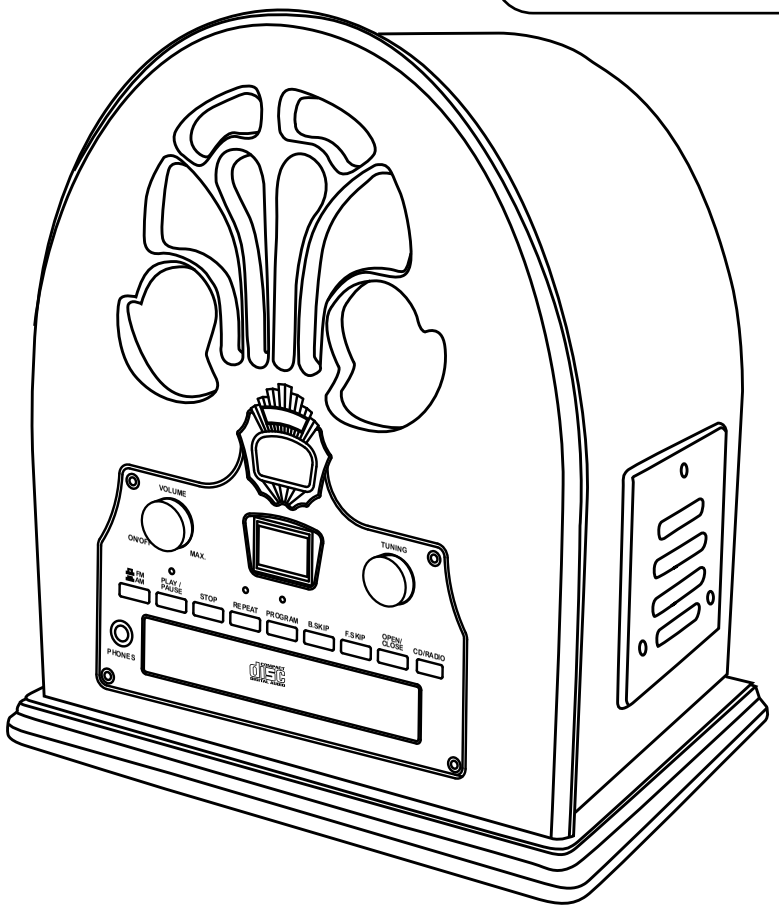

910-255500-001

General

Troubleshooting

The unit does not operate

1 The AC adapter is not connected. Check to make sure it is plugged in correctly.

2 The unit is not turn on rotate the VOLUME ON/OFF KNOB (2) from the OFF position past the “click” to turn on the unit .

There is no Sound

1 Check the volume level by turning the VOLUME KNOB (2).

CD does not play

1 Check to make sure CD is inserted correctly (label side facing up).

2 Check that the surface of the CD is clean

3 Make sure function switch is set to CD.

Headphone Jack

Listening through Earphones/Headphones (not included)

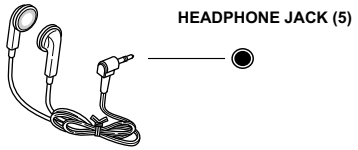

The sound from all speakers is cut off.

WARNING:

TO PREVENT FIRE OR SHOCK HAZARD, DO NOT EXPOSE THIS APPLIANCE TO RAIN OR MOISTURE. DO NOT REMOVE COVER. PILOT LAMPS SOLDERED IN PLACE. NO USER SERVICEABLE PARTS INSIDE. REFER SERVICING TO QUALIFIED SERVICE PERSONNEL.

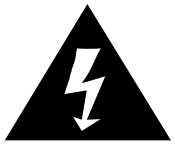

The lighting flash with arrowhead symbol, within an equilateral triangle, is intended to alert user to the presence of uninsulated "dangerous voltage" within the product's enclosure that may be of sufficient magnitude to constitute risk of electric shock to persons.

CAUTION

RISK OF ELECTRIC SHOCK DO NOT OPEN

CAUTION: TO REDUCE THE RISK OF ELECTRIC SHOCK, DO NOT REMOVE COVER (OR BACK). NO USER - SERVICEABLE PARTS INSIDE. REFER SERVICING TO QUALIFIED SERVICE PERSONNEL.

The exclamation point within an equilateral triangle is intended to alert user to the presence of important operating and maintenance (servicing) instruction in the literature accompanying the appliance.

Specification

Frequency Range	:	AM 520 - 1710 KHz
	:	FM 87.5 - 108 MHz
Power Supply	:	AC adapter (DC 12V 1A)(Included)
Power Consumption	:	14W
Speaker	:	3” 8Ohm 3W x 2

* DESIGN AND SPECIFICATIONS SUBJECT TO CHANGE WITHOUT NOTICE.

CD Player

Playing a CD

1 Turn the unit on by turning the ON/OFF KNOB (2) located on the front panel to the ON position.

2 Press the CD/Radio MODE BUTTON (16) to the CD position.

3 Press the OPEN/CLOSE BUTTON (15) to open the CD DRAWER(10).

4 Load the desired CD into the player with the labeled side of the CD facing up and close the CD DRAWER(10).

5 The LED DISPLAY (18) will flash (- -) for a second and then display the total number of tracks on the CD.
Note: The display will read “no” if there is no disc in the unit or the disc cannot be read.

6 Press the PLAY/PAUSE BUTTON (6) to begin playing the CD.

7 To skip to a different track, press the FORWARD SKIP BUTTON (14) or BACKWARD SKIP BUTTON (13) until you reach the desired track number. Pressing the FORWARD SKIP BUTTON (14) will advance forward from track to track. Pressing the BACKWARD SKIP BUTTON (13) will skip backwards from track to track.

8 To fast forward through part of a particular track, press and hold the FORWARD SKIP BUTTON (14). Playback will resume at the point that you release the button. To reverse playback, press and hold the BACKWARD SKIP BUTTON (13).

9 To pause during playback, press the PLAY/PAUSE BUTTON (6). To resume play, press the button again.

10 To Stop playback, press the STOP BUTTON (7).

Play Mode

1 There are three modes in which you can listen to your CD :
Normal, Repeat 1, Repeat all.

2 To change between these options, press the REPEAT BUTTON (16). The play mode will change in the following sequence.

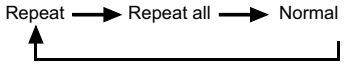

3 In Normal mode, the CD will play from track 1 or the first selected track till the end of the CD and stop.

4 When in Repeat 1, the repeat light will flash and only the selected song will be repeated. You can select the song to repeat before you press play or during playback.

5 When in Repeat all, the repeat light will stay on continuously. In this mode, once the CD is finished, it will start over from the beginning.

6 Pushing STOP BUTTON(7) will clear the Random and Repeat functions and the unit will return to Normal Mode.

Programmed Play

You can program up to 20 tracks that will play in the order that you program them.

1 In CD Mode with a CD inserted and play stopped, press the PROGRAM BUTTON (11).

2 Select a track you would like to program in memory by using the Forward or Backward skip buttons.

3 Once you have selected a track, press the PROGRAM BUTTON (11) again. That track is now stored.

4 Repeat steps 2-3 to store up to 20 tracks.

5 When all desired tracks are programmed, press the PLAY/PAUSE BUTTON (6) to begin playback of the selected tracks. The tracks will play in the order in which they were programmed.

6 To clear programming, press the stop button. Programmed tracks will also be cleared if the CD Drawer is opened or the power is disconnected.

Control Locators

Unit Controls

1 Tuner Dial
2 Volume On/Off Knob
3 Play/Pause Indicator
4 AM/FM Button
5 Headphone Jack
6 Play/Pause Button
7 Stop Button
8 Repeat Indicator
9 Repeat Button
10 CD Drawer
11 Program Button
12 Program Indicator
13 Backward Skip Button
14 Forward Skip Button
15 Open/Close Button
16 CD/RADIO Mode Button
17 Tuning Knob
18 LED Display

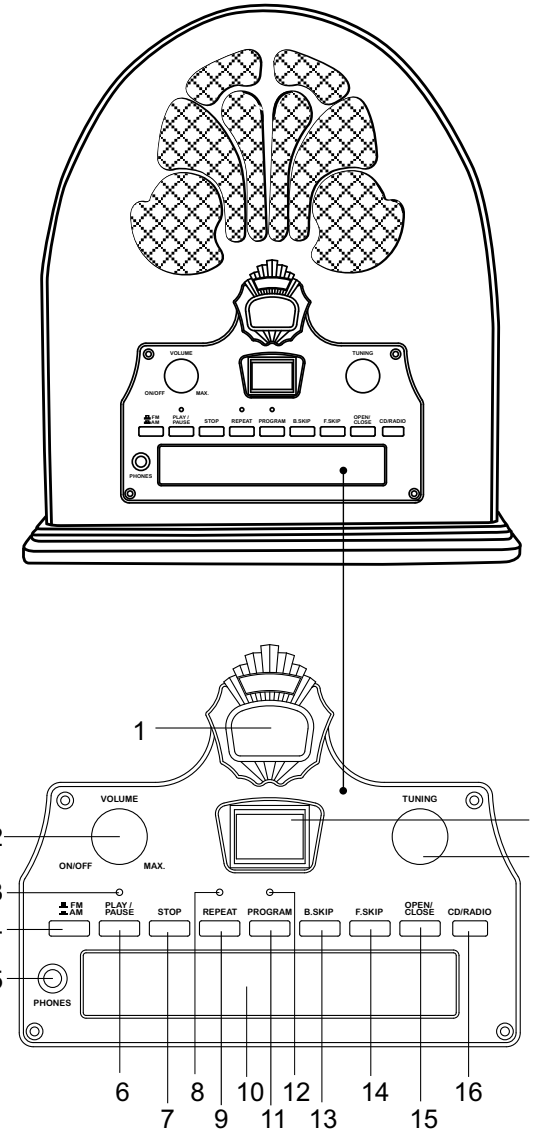

IMPORTANT SAFETY INSTRUCTION

PLEASE READ CAREFULLY ALL THE FOLLOWING IMPORTANT SAFEGUARDS THAT ARE APPLICABLE TO YOUR EQUIPMENT

1. Read Instructions - All the safety and operating instructions should be read before the product is operated.
2. Retain instructions - The safety and operating instructions should be retained for future reference.
3. Heed Warnings - All warnings on the product and in the operating Instructions should be adhered to.
4. Follow Instructions - All operating and use instructions should be followed.
5. Cleaning - Unplug this product from the wall outlet before cleaning. Do not use liquid cleaners or aerosol cleaners. Use a damp cloth for cleaning.
6. Attachments - Do not use attachments not recommended by the product manufacturer as they may cause hazards.
7. Water and Moisture - Do not use this product near water - for example, near a bath tub, wash bowl, kitchen sink, or laundry tub; in a wet basement; or near a swimming pool; and the like.
8. A product and cart combination should be moved with care. Quick stops, excessive force, and uneven surfaces may cause the product and cart combination to overturn.

9. Ventilation - Slots and openings in the cabinet are provided for ventilation and to ensure reliable operation of the product and to protect it from overheating, and these openings must not be blocked or covered, The openings should never be blocked by placing the product on a bed, sofa, rug, or other similar surface. This product should not be placed in a built - in installation such as a bookcase or rack unless proper ventilation is provided or the manufacturer's instructions have been adhered to.
10. Power Sources - This product should be operated only from the type of power source indicated on the marking label, if you are not sure of the type of power supply to your home. Consult your product dealer or local power company. For products intended to operate from battery power, or other sources, refer to the operating instructions.
11. Grounding or Polarization - This product may be equipped with a polarized alternating-current line plug (a plug having one blade wider than the other). This plug will fit into the power outlet only one way. This is a safety feature. If you are unable to insert the plug fully into the outlet try reversing the plug, If the plug should still fail to fit, contact your electrician to replace your obsolete outlet. Do not defeat the safety purpose of the polarized plug.
12. Power - Cord Protection - Power - supply cords should be routed so that they are not likely to be walked on or pinched by items placed upon or against them, paying particular attention to cords at plugs, convenience receptacles, and the point where they exit from the product.
13. Lightning - For added protection for this product during a lightning storm, or when it is left unattended and unused for long periods of time, unplug it from the wall outlet and disconnect the antenna or cable system. This will prevent damage to the product due to lightning and power - line surges.
14. Power Lines - An outside antenna system should not be located in the vicinity of overhead power lines or other electric light or power circuits, or where it can fall into such power lines or circuits. When installing an outside antenna system, extreme care should be taken to keep from touching such power lines or circuits as contact with them might be fatal.
15. Overloading - Do not overload wall outlets, extension cords, or integral convenience receptacles as this can result in a risk of fire or electric shock.
16. Object and Liquid Entry - Never push objects of any kind into this product through openings as they may touch dangerous voltage points or short - out parts that could result in a fire or electric shock. Never spill liquid of any kind on the product.
17. Servicing - Do not attempt to service this product yourself as opening or removing covers may expose you to dangerous voltage or other hazards. Refer all servicing to qualified service personnel.
18. Damage Requiring Service - Unplug this product from the wall outlet and refer servicing to qualified service personnel under the following conditions;
    a. When the power-supply cord or plug is damaged.
    . If liquid has been spilled, or objects have fallen into the product.
    c. If the product has been exposed to rain or water.
    d. If the product does not operate normally by following the operating instructions. Adjust only those controls that are covered by the operating instructions as an improper adjustment of other controls may result in damage and will often require extensive work by a qualified technician to restore the product to its normal operation.
    e. If the product has been dropped or damaged in any way.
    f. When the product exhibits a distinct change in performance - this indicates a need for service.
19. Replacement Parts - When replacement parts are required, be sure the service technician has used replacement parts specified by the manufacturer or have the same characteristics as the original part. Unauthorized substitutions may result in fire, electric shock, or other hazards.
20. Safety Check - Upon completion of any service or repairs to this product, ask the service technician to perform safety checks to determine that the product is in proper operating condition.
21. Wall or ceiling Mounting - The product should be mounted to a wall or ceiling only as recommended by the manufacturer.
22. Heat - The product should be situated away from heat sources such as radiators. Heat registers, stoves, or other products (including amplifiers) that produce heat.

WARNING: Changes or modifications to this unit not expressly approved by the party responsible for compliance could void the user's authority to operate the equipment.

NOTE: This equipment has been tested and found to comply with the limits for a Class B digital device, pursuant to Part 15 of the FCC Rules. These limits are designed to provide reasonable protection against harmful interference in a residential installation. This equipment generates, uses, and can radiate radio frequency energy and, if not installed and used in accordance with the instructions, may cause harmful interference to radio communications. However, there is no guarantee that interference will not occur in a particular installation. If this equipment does cause harmful intereference to radio or television reception, which can be determined by turning the equipment off and on , the user is encouraged to try to correct the interference by one or more of the following measures:

- Reorient or relocate the receiving antenna.
- Increase the separation between the equipment and receiver.
- Connect the equipment into an circuit different from that to which the receiver is connected.
- Consult the dealer or an experienced radio TV technician for help.

WARRANTY

Crosley Radio Products are warranted against defects in material and workmanship for a period of 90 days beginning from the date of sale to the original purchaser.

Should the unit fail under normal usage during the 90 day warranty period, a request for RETURN AUTHORIZATION (R.A.) must be made by the original customer before returning the unit. Call Crosley Radio customer service for Return Authorization at (502) 583-4246 from 9 AM to 5 PM (EST) Monday to Friday.

Upon receiving the RETURN AUTHORIZATION number from the Customer Service Department, properly pack your unit in its original packaging. Include any adapters, parts, & accessories which were originally provided with the product, along with a check or money order for $19.95 made out to Crosley Radio to cover the handling and return postage. Display the R.A. # on the outside of the carton and ship PREPAID via standard UPS or its equivalent.

CROSLEY
RADIO

ATTN: RETURNS DEP'T
2001 PRODUCTION DRIVE
BAY 2 & 3
LOUISVILLE, KY 40299

CROSLEY RADIO assumes no responsibility for units sent without prior Return Authorization.

The purchaser's bill of sale is the only proof of warranty entitlement and must accompany the unit.

The warranty does not cover damage due to acts of nature, accident, misuse, abuse, negligence, commercial use or modification of, or to any part of the product. This warranty does not cover damage due to improper operation or maintenance, connection to improper voltage supply, or attempted repair by anyone other than a facility authorized by Crosley Radio to service the product. This warranty does not cover products sold AS IS or consumables (such as fuses or batteries). This warranty is valid only in the United States.

This warranty gives the purchaser specified legal rights in addition to any rights which may vary from state to state.

In accordance with the "Moss-Magnuson Warranty Act" of July 10, 1975, this is termed a "limited warranty" which in no way compromises Crosley Radio, high standards of Quality and Workmanship.

Welcome

Thank you for purchasing the Crosley Catherdral CD (CR32CD). Before operating this unit, please read this manual thoroughly and retain it for future reference.

About This Manual

Instructions in this manual describe the control functions of the CR32CD.

Table of Contents

Control Locators

Control Locators..... 4 - 5

Getting Started

Unpacking 6
Set up 6

CD Player

Playing a CD 7
Play Mode 7
Programmed Play 7

Radio Operation

Radio Operation 8
Hints For Better Reception..... 8
Antenna 8

General

Headphone Jack 9
Troubleshooting Guide 9
Warranty 10

Radio Operation

Radio Operation

1 Press the CD/RADIO MODE BUTTON (16) to the Radio position.

2 Press the AM/FM BUTTON (4) to the desired radio band (AM ▬ or FM ▬).

3 Select the desired radio station by rotating TUNING KNOB (17).

4 Adjust the VOLUME KNOB (2) to the desired sound level.

Hints For Better Reception

FM – Make sure the FM WIRE ANTENNA (20) is fully extended in a straight line.
AM – This radio is equipped with an internal AM antenna. Try rotating the unit slightly to one side or the other to improve AM reception.

Antenna

Antenna: for FM reception, the unit is provided with a FM WIRE ANTENNA (20) , move the wire until the reception is clear and with no interferences. For AM reception, the unit is provided with a directional build-in ferrite antenna. Rotate the set to find the position in which the best reception is obtained. Do not connect the FM WIRE ANTENNA (20) to any outside antenna.

Control Locators

Unit Controls

19 Speaker
20 Antenna
21 AC Adapter
22 12V AC Adapter Jack

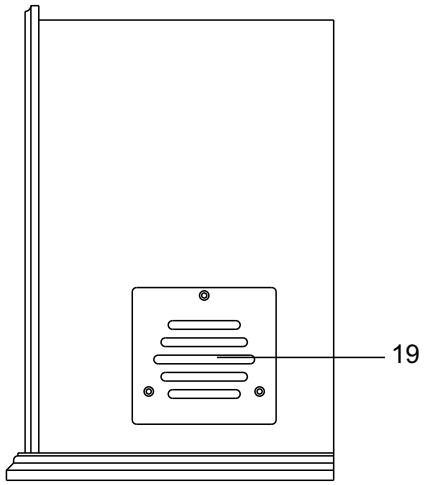

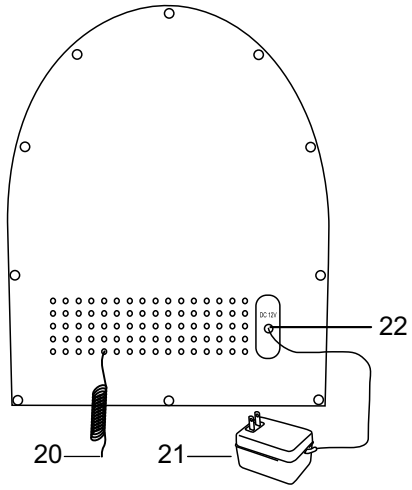

Getting Started

Unpacking

1 Pull the packing materials off the unit.

2 Remove the plastic bag covering the radio.

3 Press OPEN/CLOSE BUTTON (15) to open the CD DRAWER (10).

4 Unwind FM Antenna (20) and allow it to hang straight down.

5 Remove tie from A/C adapter(21).
Note: Save all packing materials.

Set Up

1 Plug A/C adapter into appropriate outlet.
Note: This product may be equipped with a polarized alternating-current line plug (a plug having one blade wider than the other.) This plug will fit into the power outlet only one way. This is a safety feature. If you are unable to insert the plug fully into the outlet try reversing the plug, if the plug should still fail to fit, contact your electrician to replace your obsolete outlet. Do not defeat the safety purpose of the polarized plug.

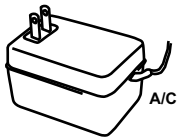
A/C adapter(21)

Power Source

1 Unwind the A/C power adapter (located in a white box inside the packaging foam). Connect the small end of the adapter to the back of the turntable. Connect the other end to an A/C power outlet.