CROSLEY
FURNITURE

Metal Patio Table
CO1012A

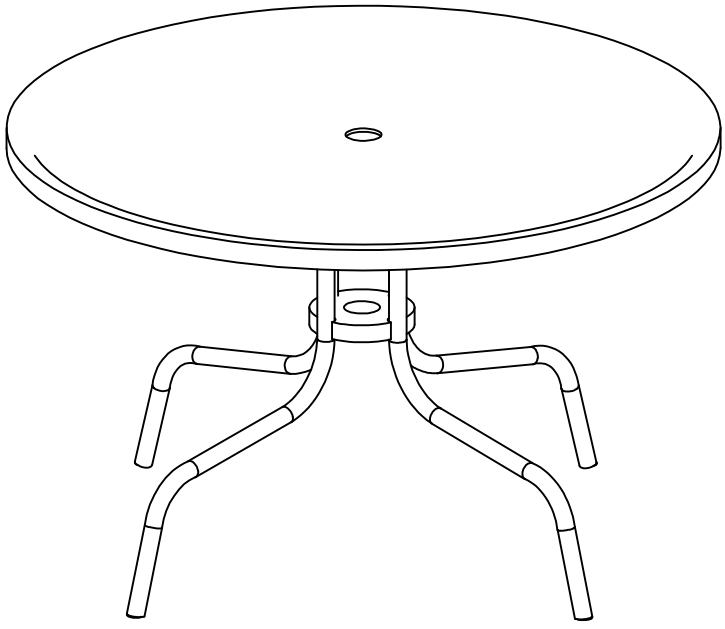

C R O S L E Y

FURNITURE

Congratulations! You have purchased a stylish piece of Crosley Furniture. We strived to provide fine furniture products, built with quality materials and hand finished details. Please carefully follow the assembly instructions to ensure your furniture is assembled correctly to provide long lasting enjoyment.

Should you experience any missing or damaged parts, **do not return to the store.** please contact us directly at 800-815-4796.

Care: Use a soft clean cloth that will not scratch the surface when dusting. Use of furniture polish is not necessary. Should you choose to use polishes, test in an inconspicuous area first. Use of solvents of any kind may damage your furniture's finish. To clean, simply use a soft clean cloth moistened with lukewarm water, hten buff with a dry soft clean cloth.

PART LIST

A	B	C		
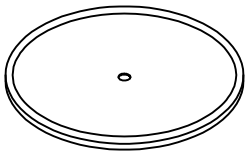				
Top 1 PC	Leg 4 PCS	Leg Coupler 2 PCS		

HARDWARE LIST

1	2	3	4	
Allen Bolt 8 PCS	Flat Washer 8 PCS	Square Nut 8 PCS	Allen Wrench 1 PC	

STEP 1

Insert Square Nuts (Part #3) into position in both of the Leg Couplers (C).

Note - Be sure that the square nuts are completely inserted to the bottom of leg coupler.

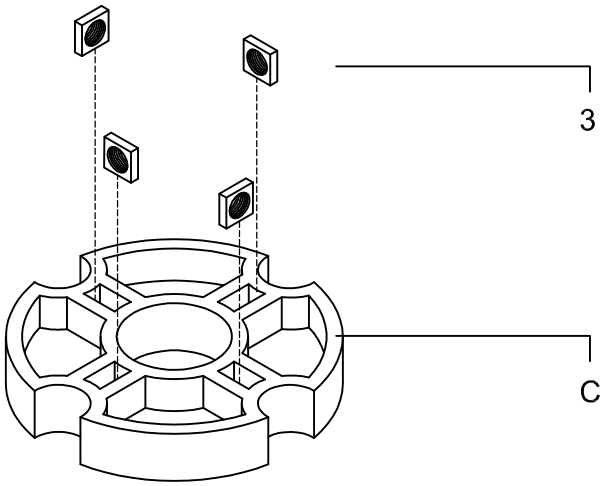

STEP 2 - Attach the Leg Coupler (C) to two of the Legs (B) using Allen Bolts (Part #1) & Flat Washers (Part #2) as shown.

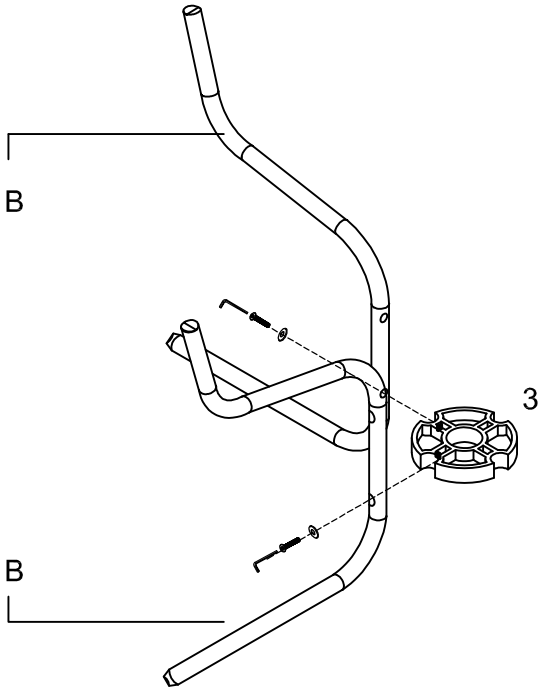

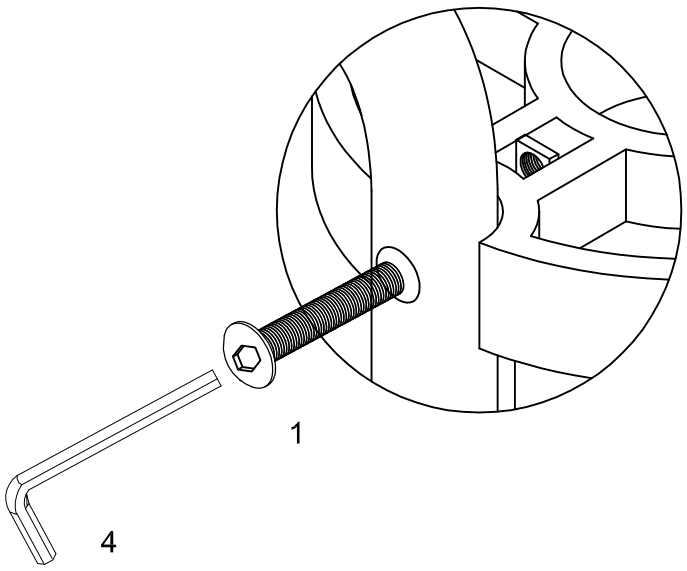

STEP 3 - Lay the Top (A) on a flat surface with the bottom lip facing up. Fit the flat ends of the legs under the lip of Top (A) aligning the hole of the Leg Coupler (C) with the hole in Top (A).

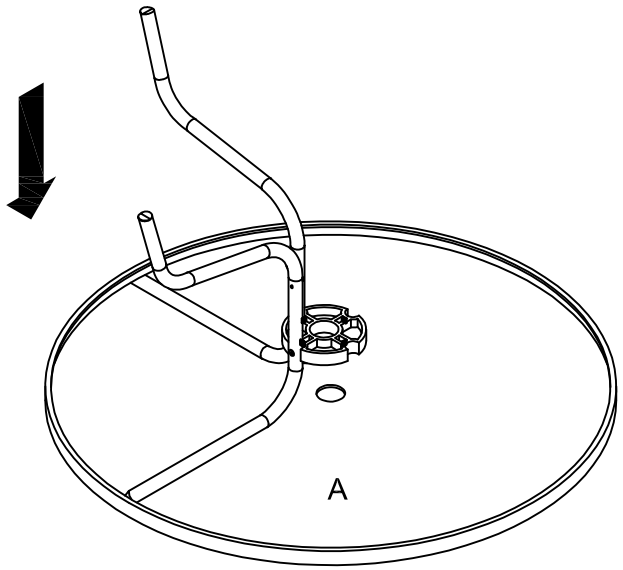

STEP 4 - Add a third Leg (B) fitting the flat end under the lip of Top (A) and attach using an Allen Bolt (Part #1) and Flat Washer (Part #2) as shown.

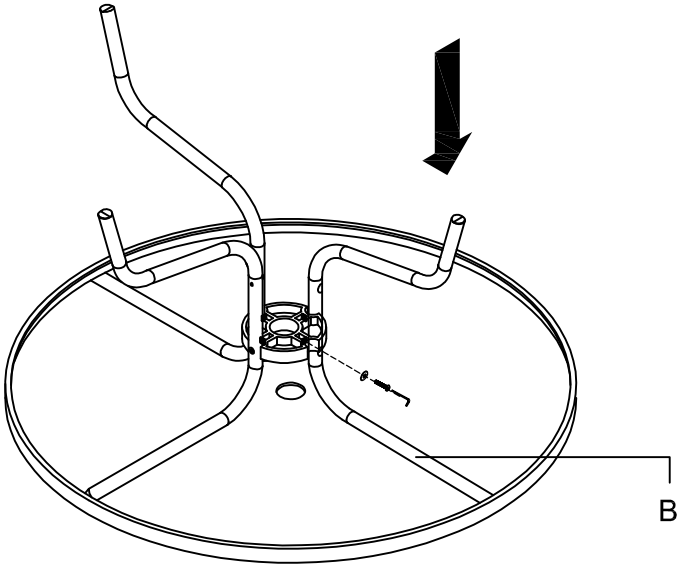

STEP 5 - Attach the second Leg Coupler (C) to the three Legs (B) using Allen Bolts (Part #1) & Flat Washers (Part #2) as shown.

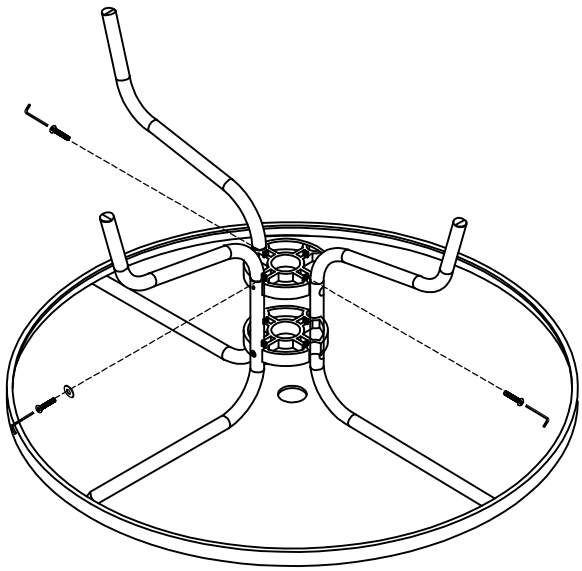

STEP 6 - Add the fourth Leg (B) by fitting the flat end of the leg under the lip of the table and positioning the portion with the bolt holes into the Leg Coupler (C).

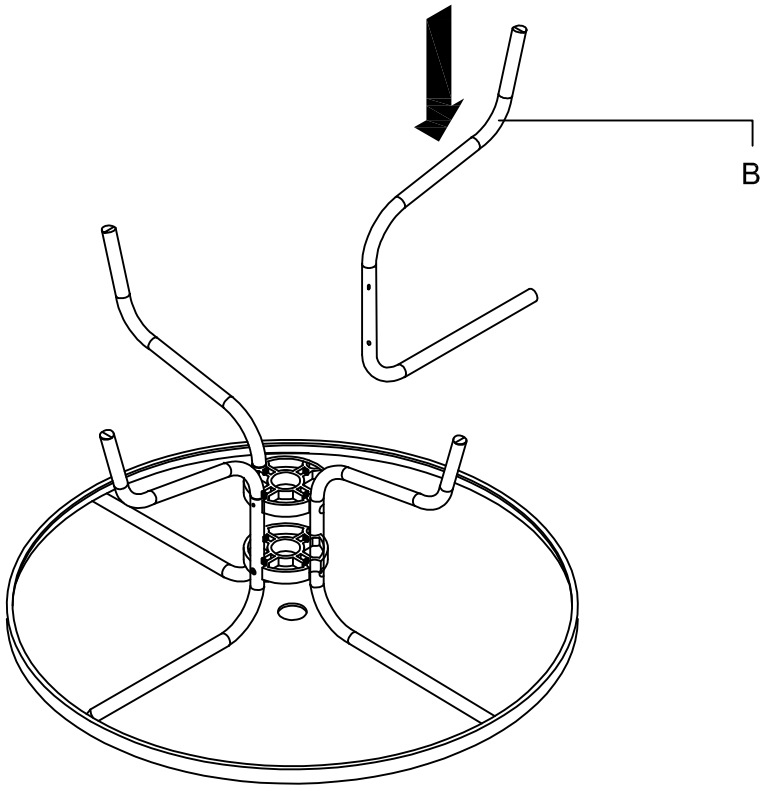

STEP 7 - Attach the fourth Leg (B) to the Leg Coupler (C) using Allen Bolts (Part #1) and Flat Washers (Part #2) as shown. Note - Be sure that the legs are aligned at 90 degree angles before tightening the fourth leg completely.

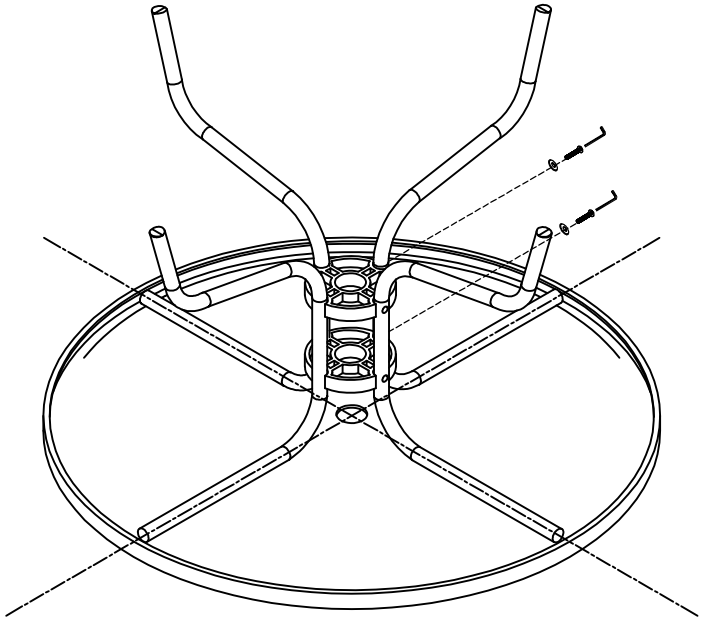
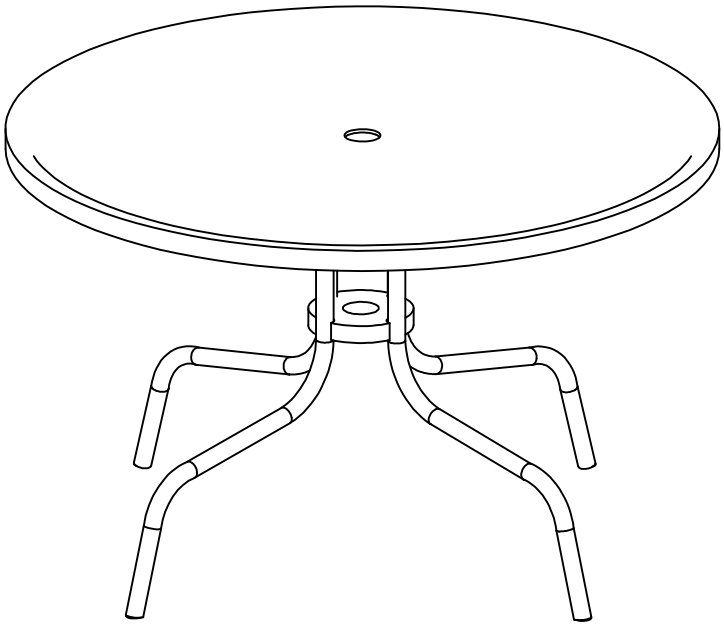
STEP 8 - Turn the table over on a flat surface.
Congratulations! You are finished.