American Standard

Installation Instructions
2064.011

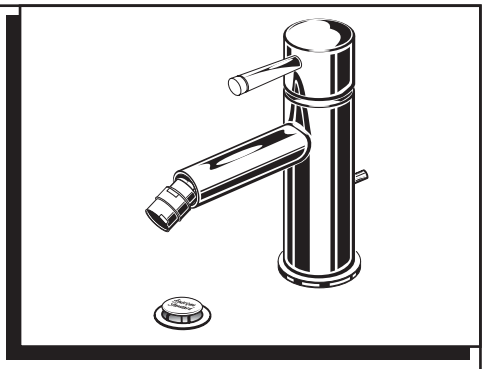

SERIN™
MONOBLOCK BIDET with
Speed Connect™ Drain

Congratulations on purchasing your American Standard faucet with Speed Connect drain, a feature found only on American Standard faucets.

Certified to comply with ANSI A112.18.1
M968851 Rev. 1.3

Speed Connect Drain*
- Fewer parts, installs in less time
- Never needs adjustment
- Guaranteed to seal properly the first time, every time.

*Your new American Standard faucet is designed to work only with the Speed Connect drain.

To ensure that your installation proceeds smoothly-please read these instructions carefully before you begin.

Recommended tools

Screwdriver

Channel Locks

Adjustable Wrench

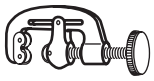
Tubing Cutter

1 INSTALL FAUCET

CAUTION **Turn off hot and cold water supplies before beginning.**

- Seat SEAL **(1)** into under side of ESCUTCHEON RING **(2)**.
- Seat ESCUTCHEON RING **(2)** with collar facing up into groove in faucet base.
- Feed FAUCET SUPPLIES **(3)**, MOUNTING STUD **(4)** and DRAIN CABLE ASSEMBLY **(8)** through ESCUTCHEON RING **(2)** and the mounting hole of lavatory or mounting surface. ***Figure A.***
- From below, push GASKET **(7)** and RETAINING WASHER **(5)** onto MOUNTING STUD **(4)**. Secure Faucet with MOUNTING NUT **(6)**, pulling faucet to front of sink, so SUPPLIES **(3)** rests against mounting hole. Before final tightening, make sure collar on MOUNTING NUT **(6)** is seated into RETAINING WASHER **(5)**. ***Figure B.***
- Adjust Faucet so that it is centered. Tighten MOUNTING NUT **(6)** to complete faucet mounting.

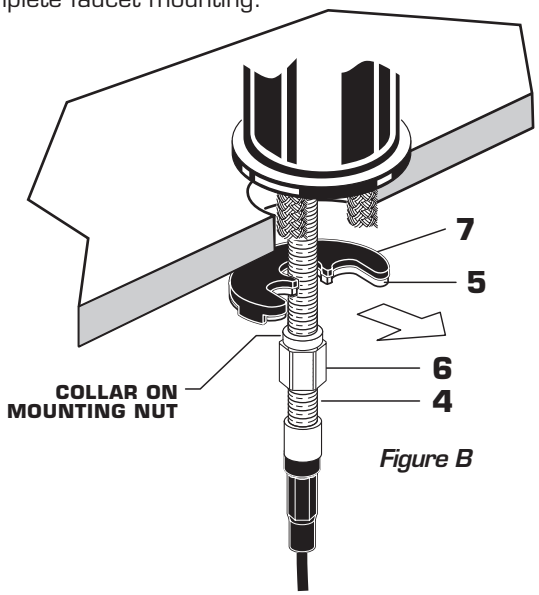

Figure B

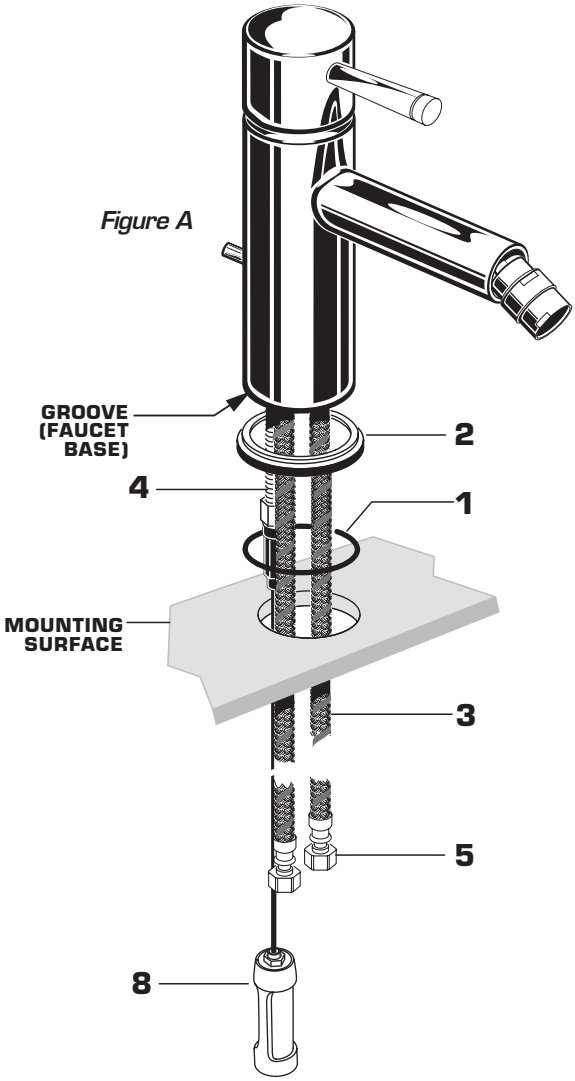

Figure A

2 POP-UP DRAIN

- Remove CLEAR PLASTIC COVER **(1)**.
- Remove CARDBOARD SPACER **(2)** from under DRAIN POP-UP **(3)**.
- Tighten TAILPIECE **(4)** on DRAIN BODY before installing DRAIN BODY. **Fig. B.**

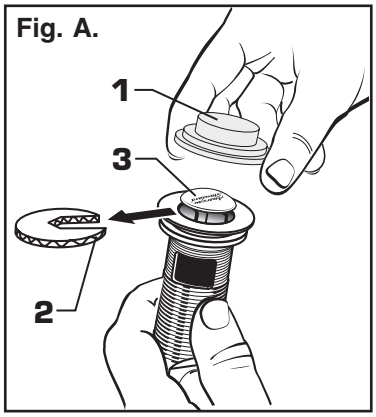

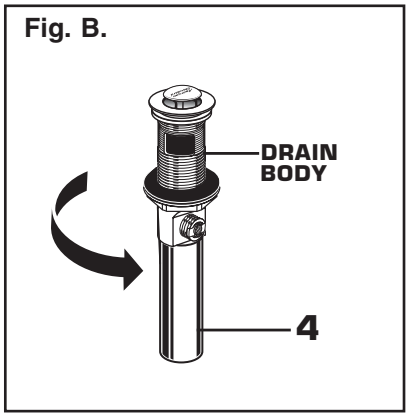

3 REMOVE FLANGE

- Thread FLANGE **(1)** counter-clockwise and remove FLANGE **(1)** and FOAM GASKET **(2)** from drain body. **Fig. A.**
- Thread LOCKNUT **(3)** clock-wise to bottom of drain body. Push GASKET **(4)** down against LOCKNUT **(3). Fig. B.**

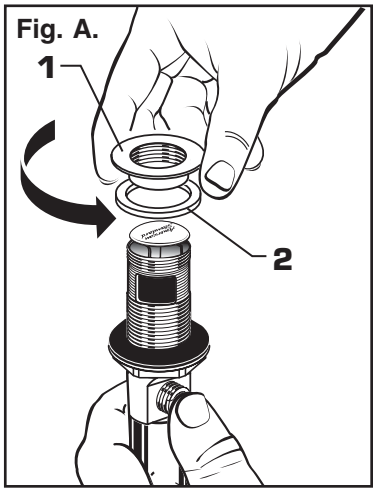

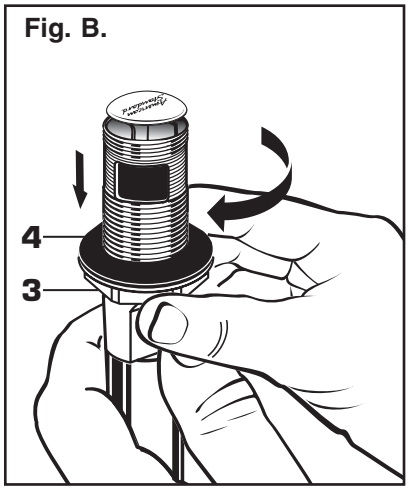

4 INSTALL DRAIN FROM BELOW FIXTURE

- From under side of BIDET install DRAIN BODY **(1)** up through drain outlet.

  Note: No plumber's putty or caulk is required. The CABLE ATTACHMENT POINT **(2)** must face towards the rear of the BIDET.

- Install FOAM GASKET **(3)** and FLANGE **(4)** onto drain body from above BIDET and tighten FLANGE **(4)** firmly.

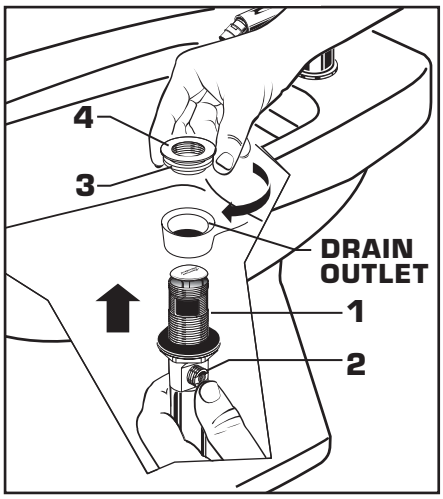

5 TIGHTEN LOCKNUT

- Tighten LOCKNUT **(1)** firmly with Adjustable Wrench or Channel Locks.

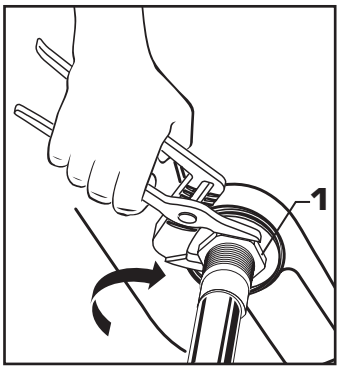

6 FLANGE GASKET

- Check DRAIN FLANGE in BIDET to ensure that WHITE FOAM GASKET **(3)** is fully compressed and not visible. **Fig. A.**
- POP-UP KNOB **(1)** must be fully down. **Fig. B.**

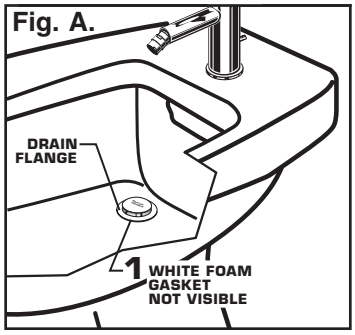

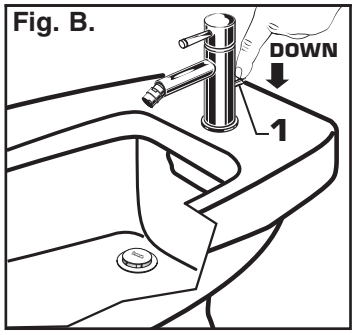

M968851 Rev. 1.3

7 ATTACH CABLE CONNECTOR

- Thread CABLE CONNECTOR **(1)** clockwise onto DRAIN BODY CONNECTION **(2)** and hand tighten. **Fig. A.**

  Your new POP-UP DRAIN installation is now complete. **Fig. B.**

  Note: Tailpeice on pop-up drain is 1-1/4" O.D. **Fig. B.**

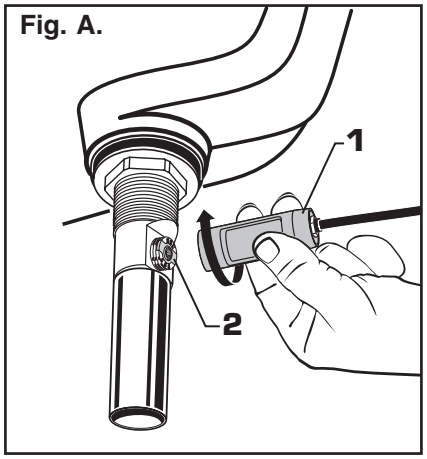

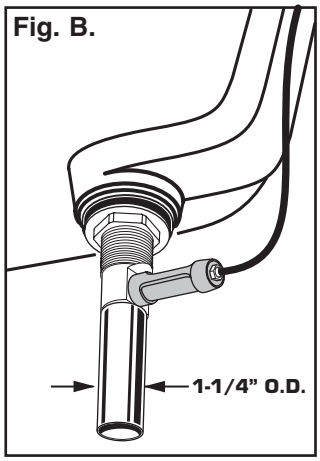

8 CHECK OPERATION OF POP-UP

- Operate LIFT KNOB **(1)** to verify that STOPPER **(2)** opens and closes.

  Note: If STOPPER **(2)** does not open and close properly then refer to the "troubleshooting section" of these instructions.

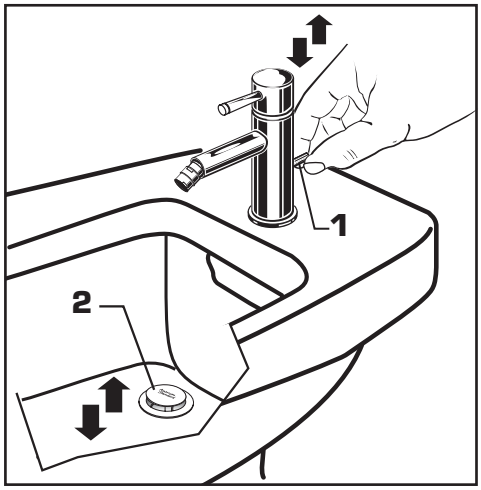

9 MAKE WATER SUPPLY AND WASTE CONNECTIONS

- Connect FLEXIBLE SUPPLIES **(1, 2)** directly to wall supplies. Connection on fitting supplies are 3/8" compression. Connect left SUPPLY **(1)** to Hot (Marked with a Red Band) and right supply to COLD **(2)** wall supply.

- Faucet supplies are 20" long from faucet base.

  Note: If additional supply length is required, installer must purchase additional parts separately.

  Important: If SUPPLY HOSES (1, 2) are to long, loop as illustrated to avoid kinking.

- Connect 1-1/4" O.D. tailpiece on POP-UP DRAIN to waste outlet.

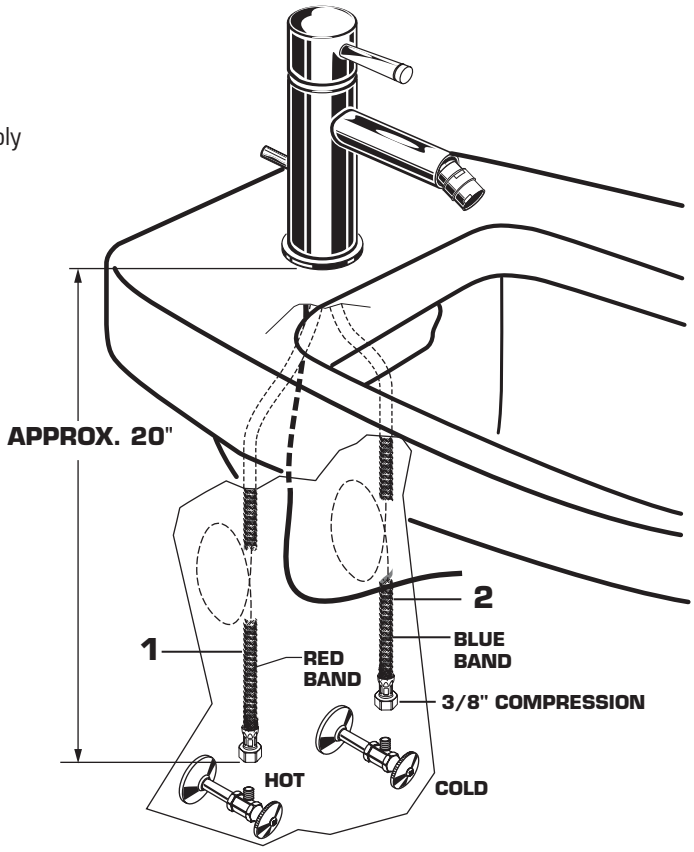

M968851 Rev. 1.3

10 TEST INSTALLED FITTING

- With HANDLE **(1)** in OFF position, turn on WATER SUPPLIES **(2)** and check all connections for leaks. ➡
- Remove AERATOR **(3)**.
- Operate HANDLE **(1)** to flush water lines thoroughly.
- Replace AERATOR **(3)**.

CHECK DRAIN CONNECTIONS

- Operate POP-UP KNOB **(4)** and fill Bidet with water. Check that DRAIN STOPPER **(5)** makes a good seal and retains water in Bidet. If DRAIN STOPPER **(5)** does not seal properly, please refer to Troubleshooting section in these instructions.
- Release POP-UP KNOB **(4)** down and check all drain connections and "P" trap for leaks. ➡ Tighten if necessary.

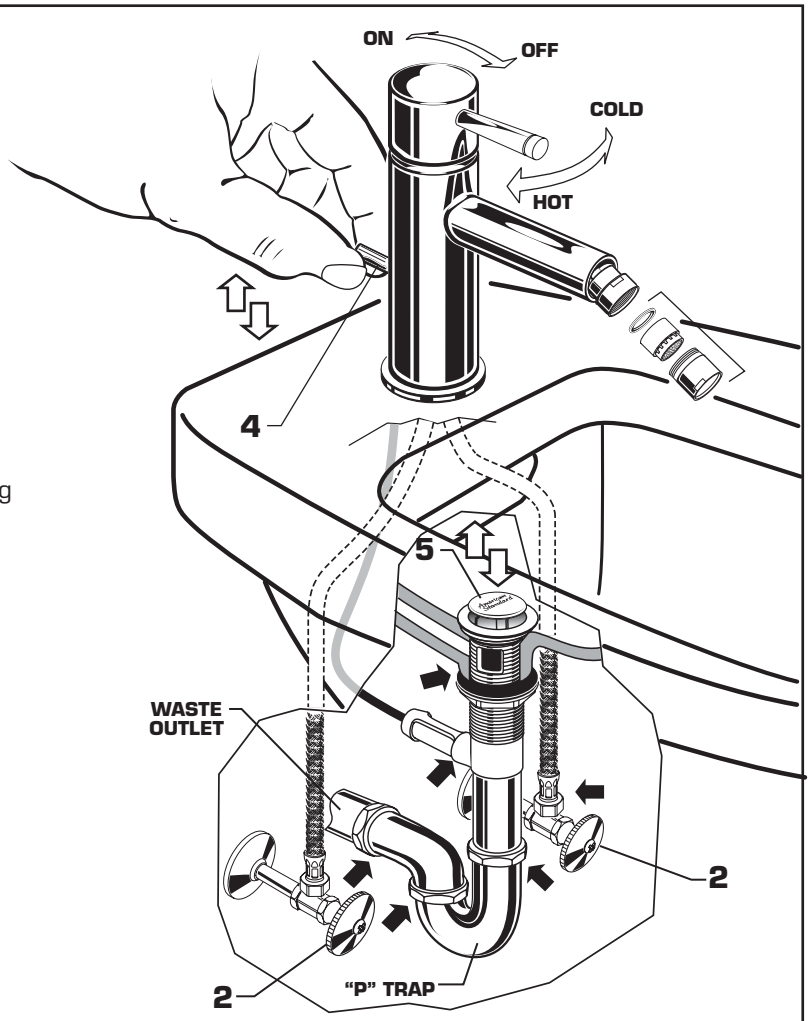

11 SERVICE

CAUTION **Turn off hot and cold water supplies before beginning.**

- To remove or replace cartidge
  - Turn valve to OFF position.
  - Pull out PLUG BUTTON **(1)** and remove HANDLE SCREW **(2)**.
  - Pull off HANDLE **(3)** and CAP **(4)**.
  - Unthread CARTRIDGE NUT **(5)** and remove.
  - Pull out CARTEIDGE **(6)**.
  - Inspect CARTRIDGE **(6)** and O-RINGS **(7)** for debris and clean if necessary.
  - Clean MANIFOLD **(8)** and rinse clean.
  - Reinstall CARTRIDGE **(6)** and O-RINGS **(7)** onto MANIFLOD **(8)**.
  - Reinstall CARTRIDGE NUT **(5)**, CAP **(4)** and HANDLE ASSEMBLY **(3)**.
- If spout drips, operate handle several times from OFF to ON and HOT to COLD position. Do not force - handles turn only 90˚.

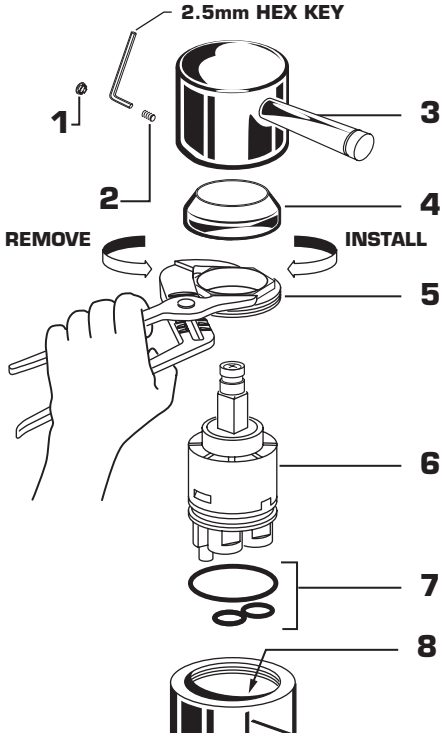

12 CARE INSTRUCTIONS:

DO: SIMPLY RINSE THE PRODUCT CLEAN WITH CLEAR WATER. DRY WITH A SOFT COTTON FLANNEL CLOTH.

DO NOT: DO NOT CLEAN THE PRODUCT WITH SOAPS, ACID, POLISH, ABRASIVES, HARSH CLEANERS, OR A CLOTH WITH A COARSE SURFACE.

M968851 Rev.1.3

Speed Connect™ Drain
Troubleshooting Guide

If sink does not hold water even though Stopper is in the "down" position:
- Follow CABLE ADJUSTMENT PROCEDURE.

If Stopper does not raise up fully or sink drains too slowly:
- Follow CABLE ADJUSTMENT PROCEDURE.

If you need to remove the Stopper:
- Follow STOPPER REMOVAL PROCEDURE.

If you would like the ability to remove your Stopper simply by lifting it out of the drain:
- Follow STOPPER INSTALLATION PROCEDURE for **"Unlocked" mode**.

CABLE ADJUSTMENT PROCEDURE

- Disconnect the Cable from the Drain by threading the Cable Connector **(1)** counter-clockwise. **Fig. A.**
- Look at the area on the Drain Body where the Cable was attached and locate the component labeled as "Cam" in the illustration. **Fig. B.**
- Use a small screwdriver to rotate the Cam in the clockwise direction as far as it will go. At this point the Stopper should be in the UP position. **Fig. B, C.**
- Push DOWN on the Lift-Knob to make sure it is fully down. **Fig. C.**
- Re-attach the Cable to the Drain Body Connection **(2)** by threading the Cable Connector **(1)** clockwise onto the Drain Body Connection **(2)** and hand-tighten. **Fig. A.**

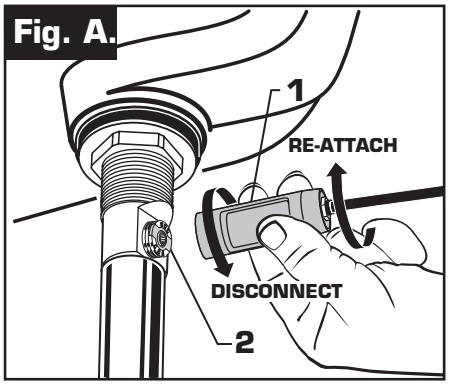

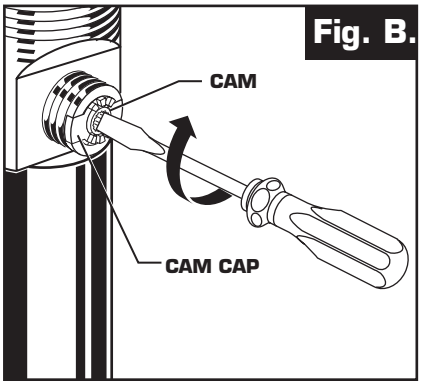

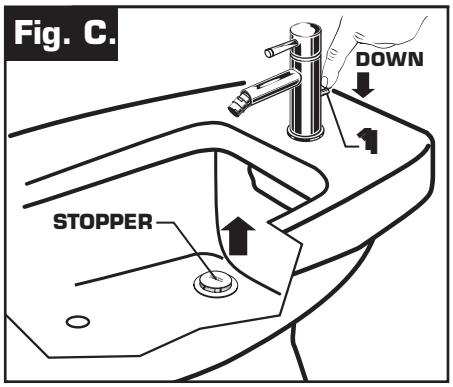

STOPPER REMOVAL PROCEDURE

- Disconnect the Cable from the Drain by threading the Cable Connector **(1)** counter-clockwise. **Fig. A.**
- Look at the area on the Drain Body where the Cable was attached and locate the component labeled as "Cam" and "Cam Cap" in the illustration. **Fig. B.**
- Use fingers or small screwdriver under either side of the Cam Cap to pry it out from the Drain. **Fig. D.**
- Remove the Cam by pulling it straight out while wiggling gently to loosen the Rubber Seal. **Fig. E.**
- The Stopper can now be removed by lifting it out of the Drain. **Fig. F.**

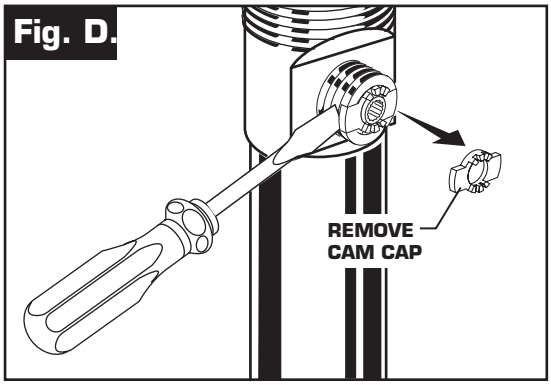

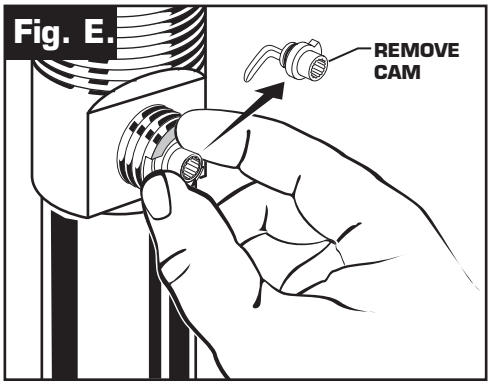

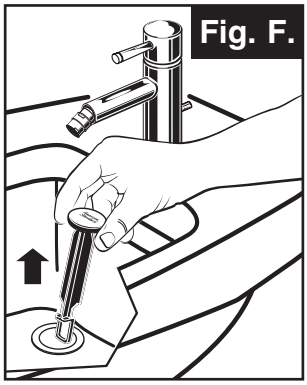

M968851 Rev.1.3

STOPPER INSTALLATION PROCEDURE

The Stopper can be installed two ways, "Locked" Mode (Stopper cannot be removed) or "Unlock" Mode (Stopper is removable).

Locked Mode:

- Look at the Plastic Loop at the bottom of the Stopper and notice that the Loop is on one side of the Stopper. **Fig. G.**
- To install the stopper in ***"Locked"*** mode, insert the Stopper into the Drain so that the Plastic Loop is facing toward the **rear** of the Sink and the American Standard logo is facing **front**. Rotate Stopper slightly if necessary so that the Stopper slides all the way down.**Fig. G.**
- Re-install the Cam into the Drain, rotating the Cam if necessary to make sure it is fully inserted. **Fig. J.**
- Re-install the Cam Cap, making sure the guide teeth are facing outward. If the Cam Cap does not "snap" into place, then rotate the Cam to make sure it is fully inserted. **Fig. K.**
- Re-attach Cable. See "CABLE ADJUSTMENT PROCEDURE" in Troubling Shooting Guide to complete installation. Stopper will be in ***"Locked"*** mode and not be removable.

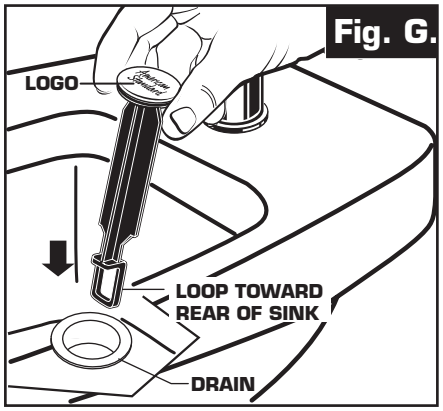

Locked Mode (Vandal Proof)

Unlocked Mode:

- Look at the Plastic Loop at the bottom of the Stopper and notice that the Loop is on one side of the Stopper. **Fig. H.**
- To install the stopper in ***"Unlocked"*** mode, insert the Stopper into the Drain so that the Plastic Loop is facing toward the **front** of the Sink and the American Standard logo is facing **rear**. Rotate Stopper slightly if necessary so that the Stopper slides all the way down. **Fig. H.**
- Re-install the Cam into the Drain, rotating the Cam if necessary to make sure it is fully inserted. **Fig. J.**
- Re-install the Cam Cap, making sure the guide teeth are facing outward. If the Cam Cap does not "snap" into place, then rotate the Cam to make sure it is fully inserted. **Fig. K.**
- Re-attach Cable. See "CABLE ADJUSTMENT PROCEDURE" in "Troublingshooting Guide" to complete installation. Stopper will be in ***"Unlocked"*** mode and removable.

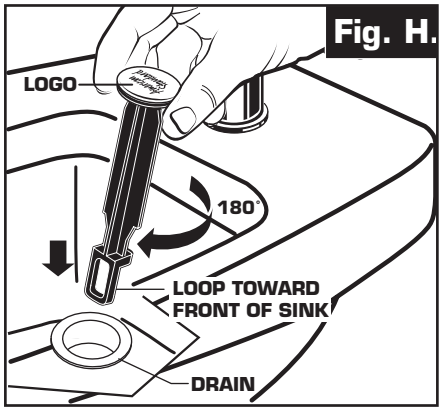
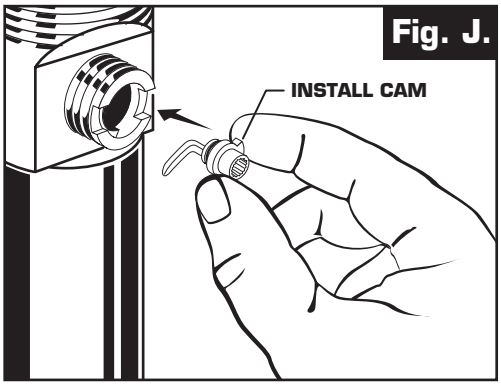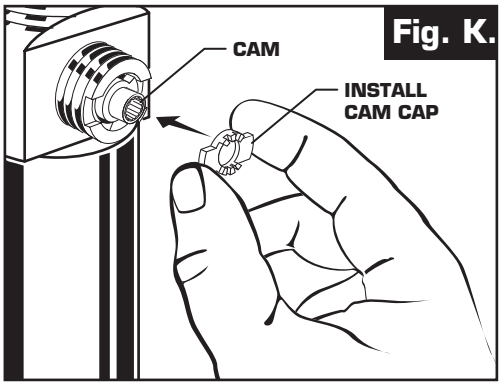
Unlocked Mode